Activities of CPPG in Support of the Theory Department Five Year Plan (Part 2 – presented by D. McCune).

- Code Dissemination, Modernization and Integration.
- Application of Theory for Experimental Data Analysis.
- Application of Theory for Predictive Transport Modeling.
- Development of Scientific Visualization Capability.
- Evaluation of Computational Hardware.

PPPL Princeton Plasma Physics Laboratory

CPPG Activities -- Code Dissemination, Modernization and Integration.

Combining the disciplines of physics, computational science, and software engineering, CPPG staff works to develop general solutions and assist major code projects in the following areas:

- **Performance**
- **Portability**
- **Standardization --**
  - **callable interfaces**
  - **data file formats**
  - **development environment** ***(example, following page)***
- **Documentation**
- **Training and Support**

Reusable code modules are submitted to the National Transport Code Collaboration (NTCC) Modules Library, http://w3.pppl.gov/NTCC

where they receive external review.

Shared TRANSP Development System

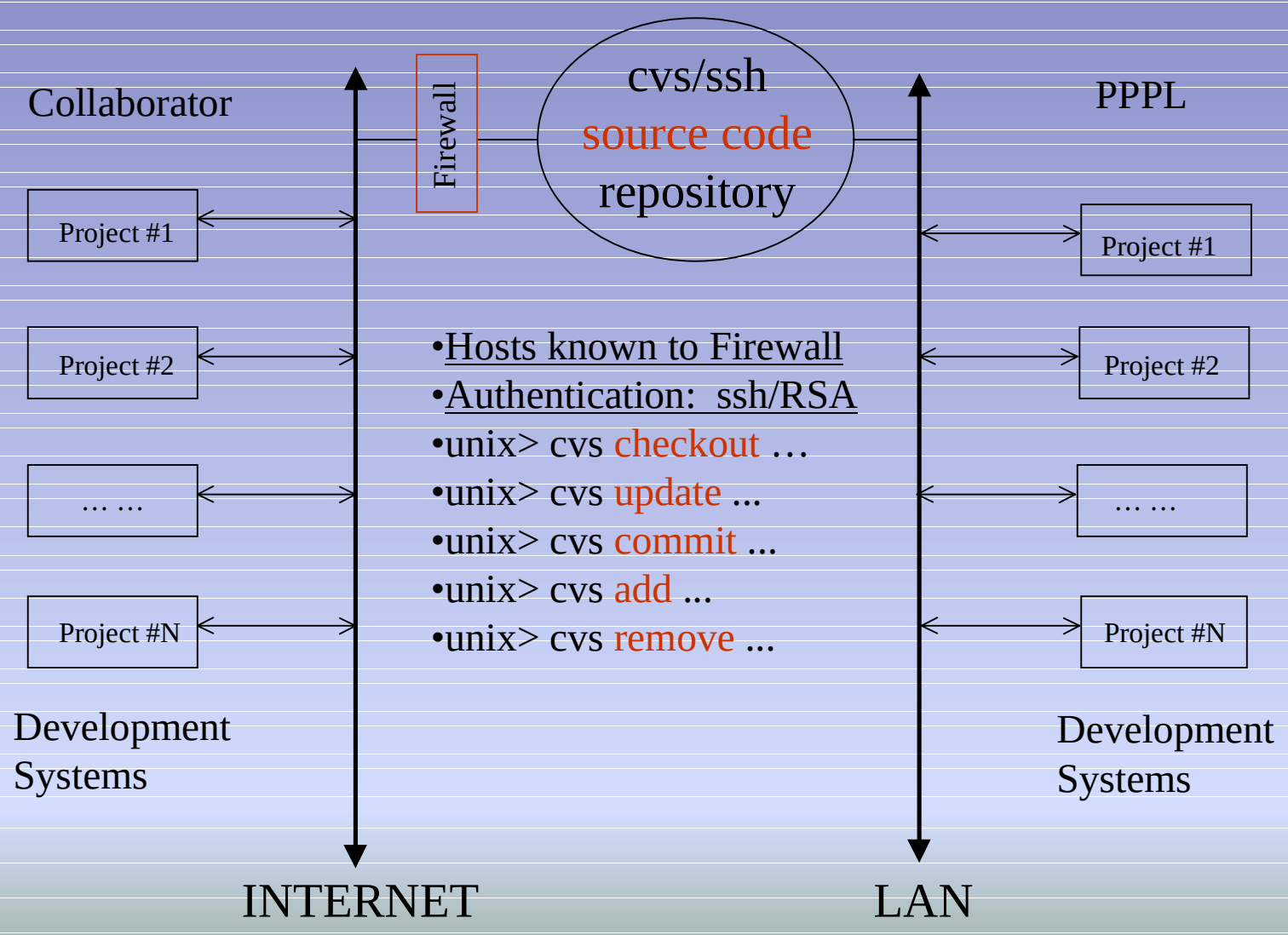

CPPG and the NTCC Modules Library

- CPPG -- computational scientists -- new professional group at PPPL
  - reflects PPPL's institutional commitment to computational science.
- Product of CPPG: high quality code, meeting modern standards
  - modularity
  - portability
  - reusability
  - documentation
- NTCC Modules Library --
  - a venue for publication and distribution of CPPG product
  - rigorous formal standards for library modules (code & documentation)
  - PPPL modules are reviewed by NTCC collaborators
  - PPPL reviews modules submitted by NTCC collaborators
  - locus for preservation of standards conforming legacy code
    - TFTR data analysis suite (Ufiles, Sglib, ...)
    - Jsolver
    - 0d predictive transport models
  - locus for generally useful tools
    - portability tools, numerical tools

CPPG and the NTCC Modules Library (continued)

- Recent CPPG submissions to the Modules Library:
  - RNG -- portable, parallel random number generator, used in Degas-2
  - Ezcdf -- easy-to-use interface to NetCDF, used by PEST-*, ORBIT-*
  - Pspline -- interpolation software
    - 1d, 2d, 3d cubic splines, cubic hermite, piecewise linear
    - fully vectorized, highly efficient
    - used in ORBIT-3d, *factor of ~10 speedup* in serial code (McCune)
    - used in PIES, *factor of ~4 speedup* in serial code (Pletzer)
    - planned for GTC.
    - used at GA, ORNL, ...
    - used outside fusion
  - Portability tools --
    - fpreproc -- cpp-based fortran pre-processor
    - portlib -- standardized interfaces to OS functions
    - ftoken -- REAL*8 convertor, declaration generator, ...
    - tools used to port VMEC, ORBIT-* and others to workstations.
    - used by small projects without direct CPPG intervention.

CPPG and the NTCC Modules Library (continued)

- Future CPPG submissions to the Modules Library:
  - xplasma -- standardized plasma representation
    - geometry (nested flux surfaces)
    - core plasma profiles
    - scrape-off plasma & limiter/wall description
    - 2d now, 3d later
  - SESC equilibrium solver
  - Sigtab -- atomic / nuclear physics packages
  - heating modules from TRANSP & TSC
    - standardized communication via xplasma
  - MDS+ & TRANSP data access libraries
- Guiding philosophy --
  - CPPG priorities set by programmatic needs
  - high software engineering standards, always
  - reusable components published via the Modules Library
- Website: http://w3.pppl.gov/NTCC
  - C. Ludescher, webmaster

CPPG Activities -- Application of Theory for Experimental Data Analysis

CPPG staff works to enable the application of theory for the analysis of experimental results, currently working in the following areas:

- **TRANSP** ***(details, next two pages)***
- **PEST-On-Line**
- **ORBIT**
- **TSC**

The ultimate goal: smooth integration of experimental data into <u>all</u> appropriate theory codes.

NTCC Modules are in preparation for generalized access to MDS+ experimental results data, and to TRANSP analysis results.

TRANSP Provides Integrated Modeling for Experimental Data Interpretation

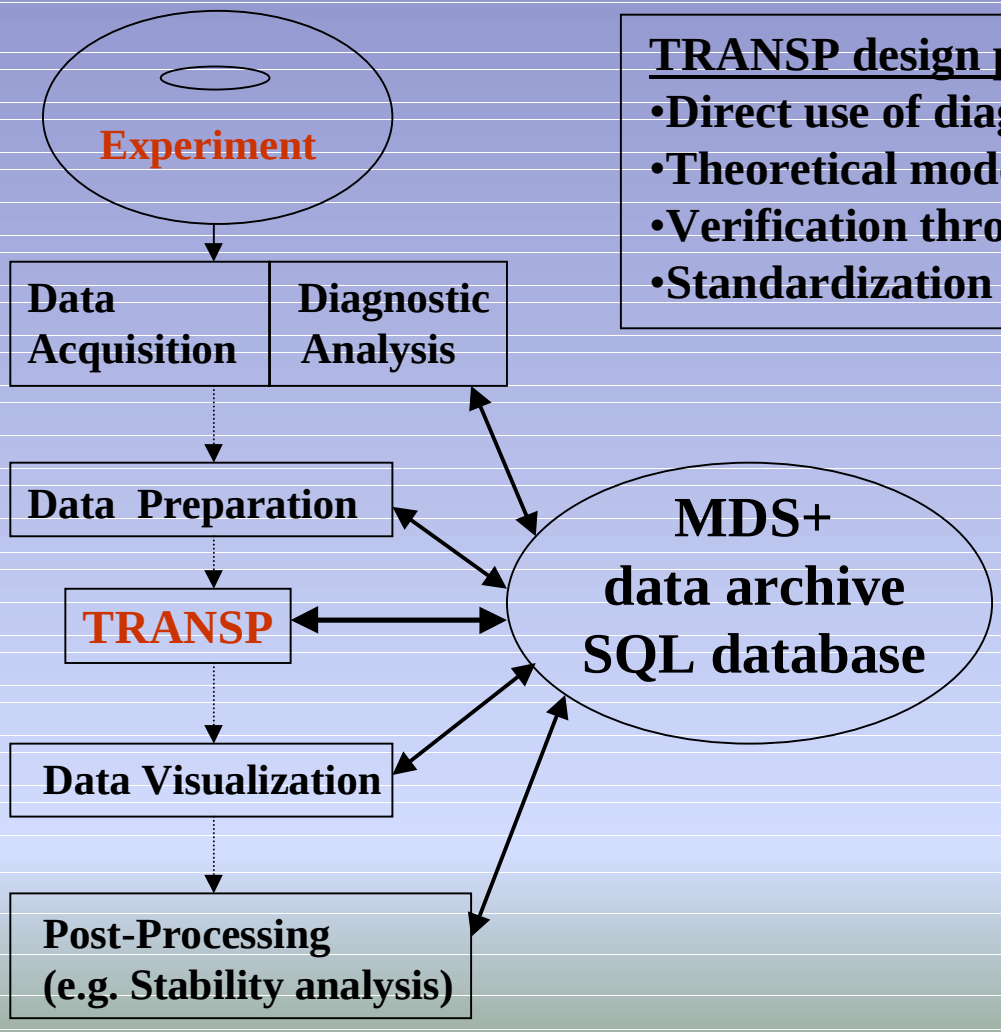

TRANSP design principles:

- Direct use of diagnostic data where feasible
- Theoretical models where data is unavailable
- Verification through diagnostic simulations
- Standardization of data across experiments

Physics features:

- MHD equilibrium
- plasma current diffusion
- beam heating
- RF heating / current drive
- atomic physics
- fusion reaction rates
- particle, energy balance
- momentum balance

TRANSP Automated Remote Compute Service

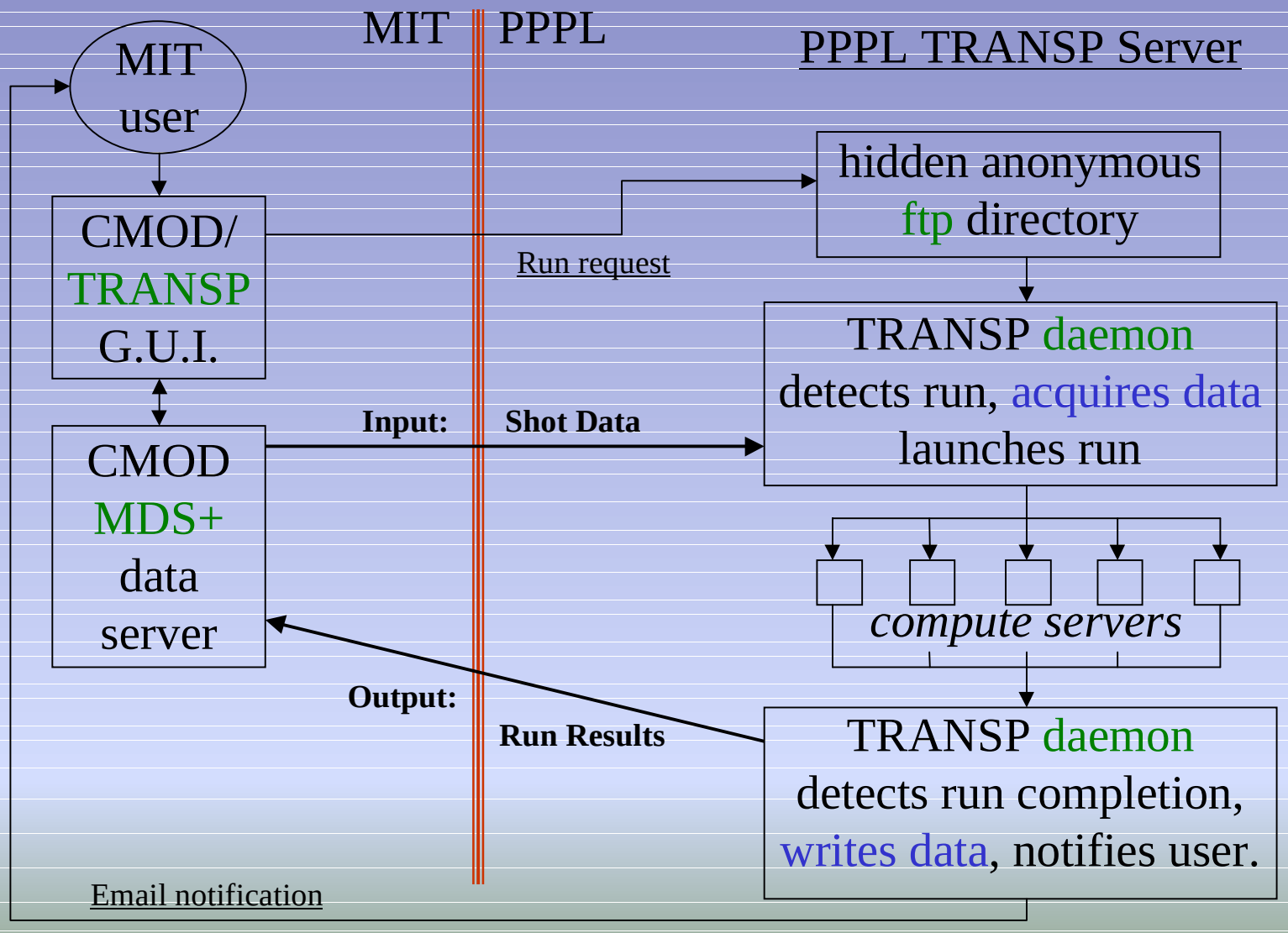

D. McCune 03/14/2000

CPPG Activities -- Application of Theory for Predictive Transport Modeling.

CPPG staff works to enable the application of theory for predictive transport modeling, working in the following areas:

- **GTC – exploring fundamentals of transport theory.**
- **TRANSP – future framework for enhanced predictive modeling**
  - **Present capabilities --**
    - **MC fast ions, bounce averaged FP, robust system.**
  - **ECH ray tracer -- PPPL/DIII-D, planned NTCC module.**
  - **Stiff predictive solver -- Lehigh U., planned NTCC module.**
- **TSC – continued support for premier free boundary code.**
- **NTCC –**
  - **Goal: extract all major physics modules from TRANSP & TSC**
  - **Goal: nationally integrated modeling effort:**
    - **Make use of physics legacy of existing codes**
    - **Avoid undue dependence on legacy code frameworks.**
  - **Goal: standard methods for accessing modeling results data.**
    - ***(see next page)***

Future of TRANSP Run Results Data Management

("industry standard" TRANSP MDS+ trees now exist)

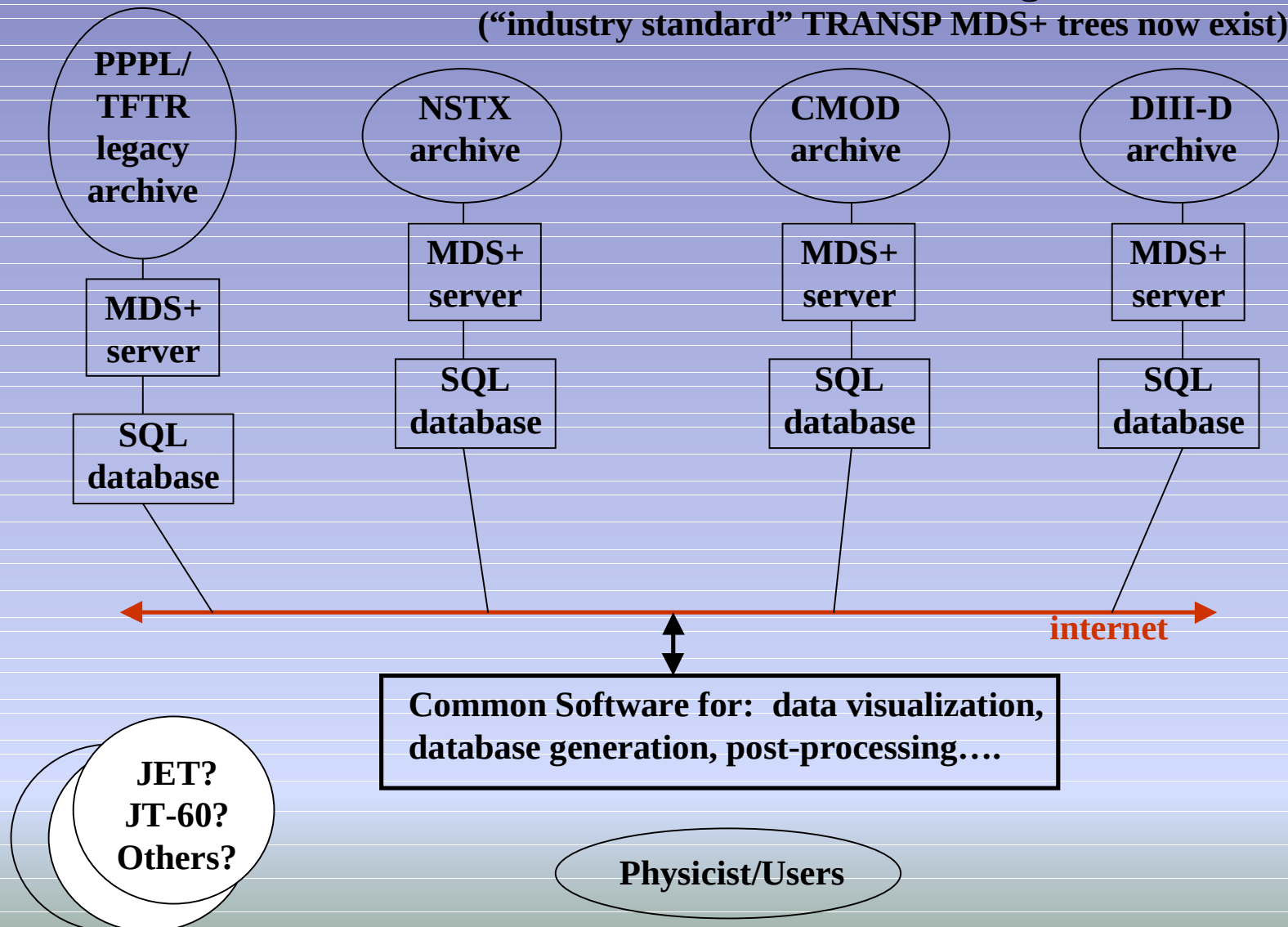

CPPG Activities -- Scientific Visualization

CPPG staff works to make scientific visualization a useful research tool for PPPL Theory, Experiment, and Engineering.

- **Display Wall -- cutting edge visualization technology.**
- **Mastery of software -- track developments in this fast moving field:**
  - **AVS/express, OpenDX, VTk, IDL, ...**
  - **Parallelized rendering software.**
  - **VDE2000 -- national visualization conference -- PPPL Apr. 2000:**
    - **Co-organized by Scott Klasky (PPPL CPPG staff).**
    - **150+ attendees, international participation.**
- **Making it Practical –**
  - **Venue for presentations and seminars.**
  - **Venue for working group meetings (e.g. theory M3D group).**
  - **Working environment:**
    - **Individual researchers examining complex data.**
    - **Debugging parallel applications.**

CPPG Activities – Computational Systems

CPPG staff works with the Theory Department to see that optimal computational hardware is readily available for researchers:

- **High end supercomputing – available at NERSC.**
- **Midrange systems at PPPL:**
  - **Intel Beowulf – 9 nodes, 18 processors, "puffin.pppl.gov"**
    - **"puffin.pppl.gov" -- 450MHz P-IIIs, 9 nodes, 18 processors.**
    - **Display Wall Computers – 733MHz P-IIIs, 10 processors.**
  - **Alpha Beowulf –**
    - **6 node 12 processor unit under construction.**
    - **750MHz alpha-21264 – superior performance workstation**
      - **Competitive with Cray-SV1 @ NERSC for serial vector codes.**
    - **Price/performance competitive with Intel.**
    - **High capacity for serial jobs.**
    - **Good for low-N / modest communication parallelized codes.**
    - **Debug stepping stone to NERSC.**
- **Unix Cluster – common system distributed over SUN, Compaq, Linux.**

CPPG Activities -- Summary

Working with the PPPL Theory Department, as well as the Experimental Department, Computer Division, and Engineering Department, the PPPL CPPG facilitates the emergence of scientific computation as a key tool Leading to progress in plasma and fusion energy sciences.

PPPL Princeton Plasma Physics Laboratory