TRANSP Status and Plans

Presented at the TRANSP Users Group Meeting,

APS/DPP – Nov. 16, 2004

Poster – HP1.002

TRANSP Developers and Users

- PPPL TRANSP team:
  - Robert Andre
  - Eliot Feibush
  - Kumar Indireshkumar
  - Scott Klasky
  - Christiane Ludescher
  - Doug McCune
  - Lew Randerson
- 4.5 FTE for TRANSP & related efforts.

- User Sites:
  - Culham (MAST)
  - GA (DIII-D)
  - IPP/Garching (Asdex-U)*
  - JET
  - MIT (C-Mod)
  - PPPL (NSTX)
  - PPPL (Collaborations)

*new site

FY05 TRANSP Funding

- NSTX/MAST (approx. 2.15 FTE, 60%)
- DIII-D collaboration (0.9 FTE, 25%)
- C-Mod collaboration (0.25 FTE, 7%)
- JET collaboration (0.25 FTE, 7%)
- Total, approximately **3.55 FTE**
  - FY04 total was 3.25 FTE
- Related Projects (**0.95 FTE additional**):
  - NTCC, **0.1 FTE** *(project ends, was 0.4 FTE in FY04).*
  - SciDAC FusionGrid (2 year renewal grant), **0.85 FTE**

FusionGrid TRANSP Annual Run Production

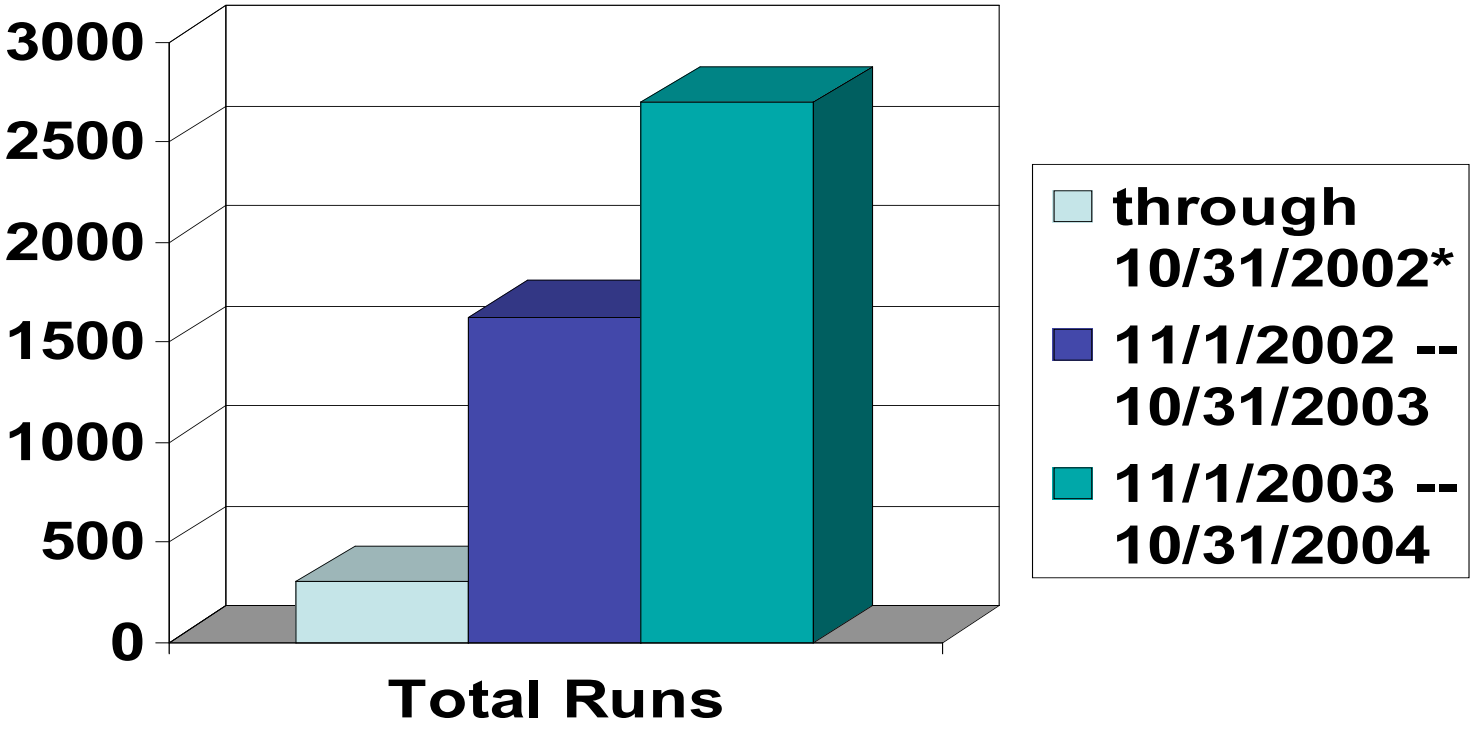

*FusionGrid TRANSP Operational Since September 2002

2698 TRANSP Runs: 11/1/2003 – 10/31/2004 at PPPL

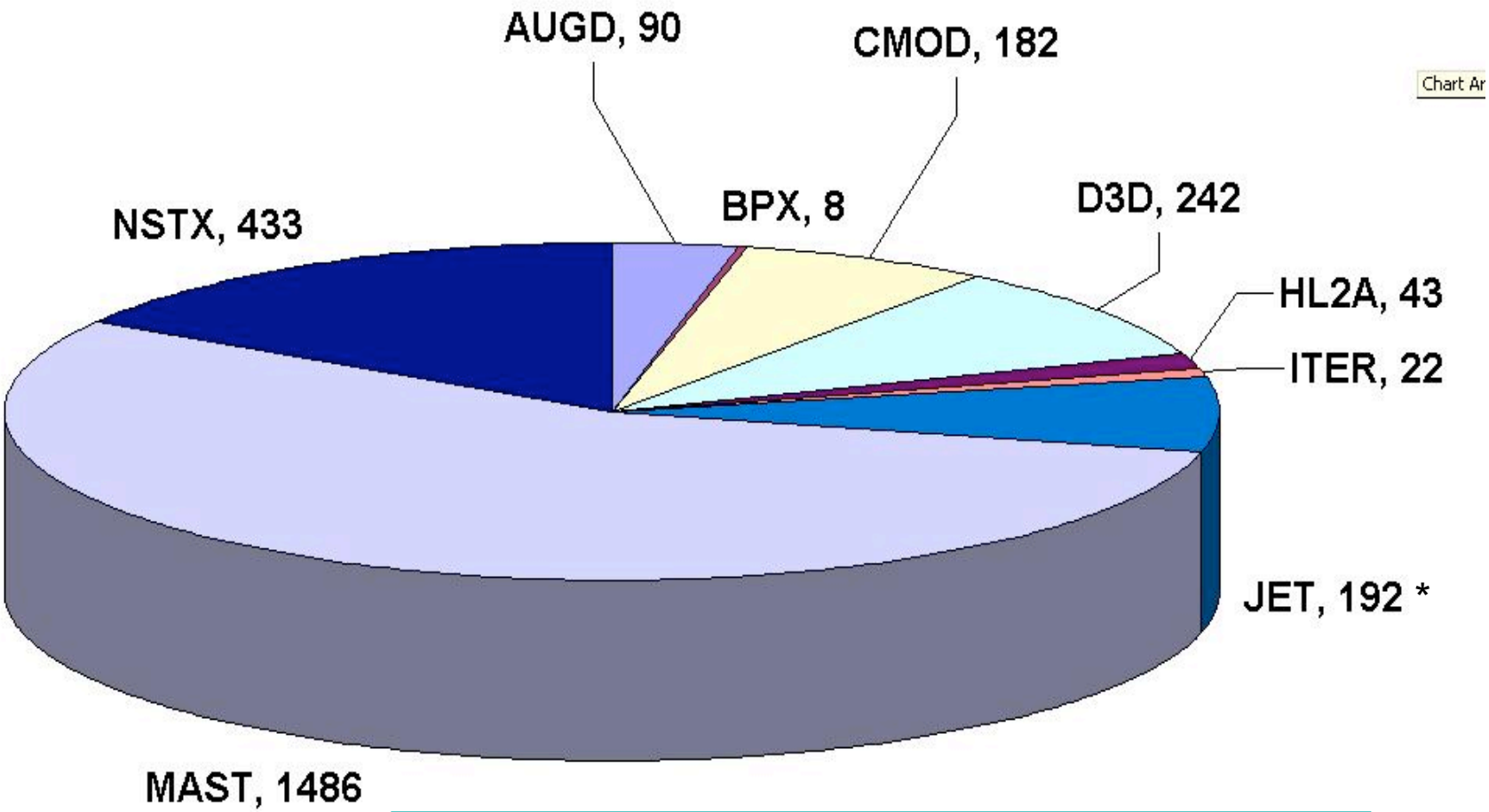

JET runs a separate, major production facility which produced over 1000 runs in 2004.

16,597 (Linux Cluster) CPU Hours, 11/1/2003 – 10/31/2004 at PPPL

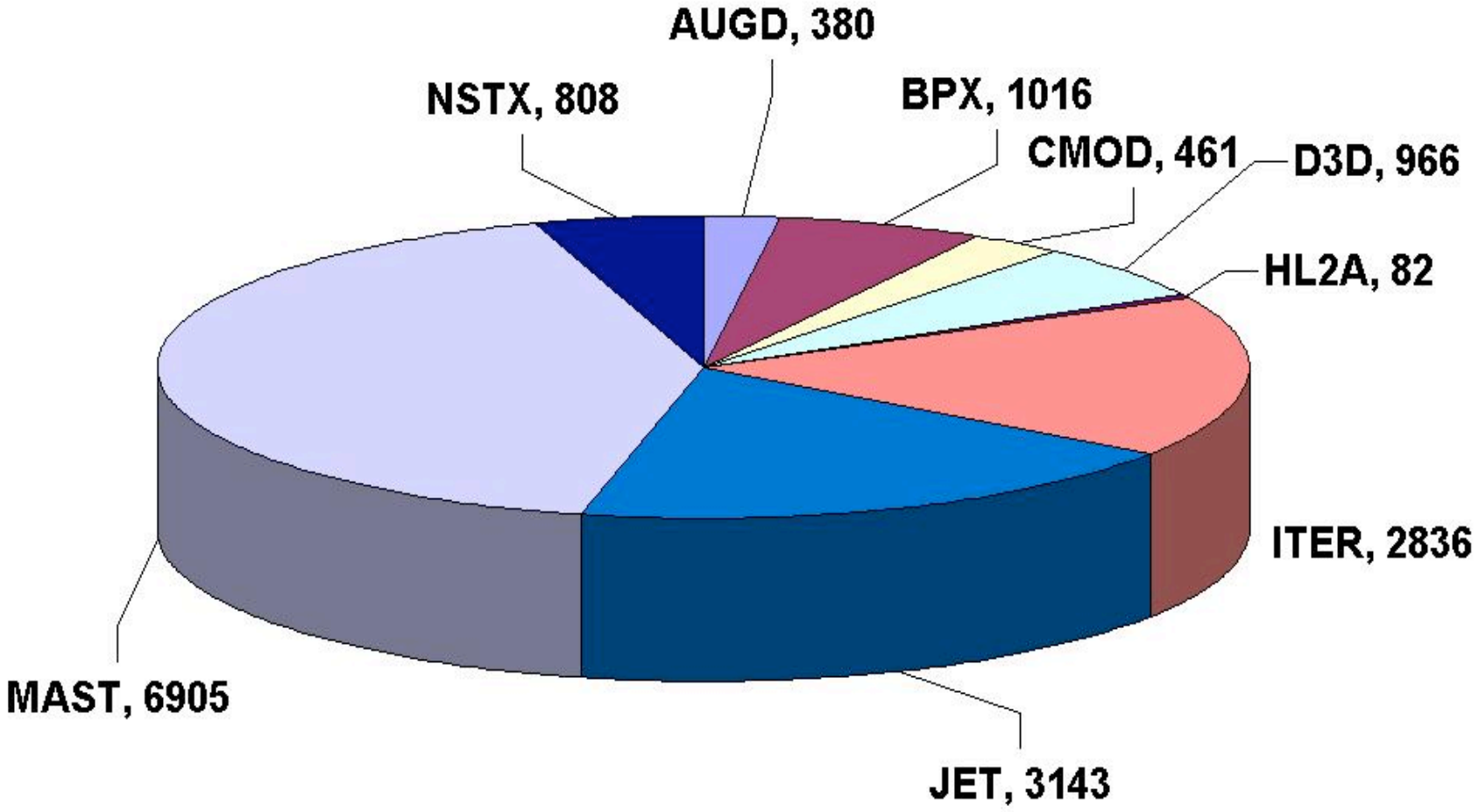

FusionGRID www.fusiongrid.org

PPPL

Applications of TRANSP

- Transport and confinement studies (with or without ITB, H-mode, etc.).
- NBI simulation; computation of fast ion distributions.
- RF heating and current drive simulations.
- Diagnostics simulations.
- Predictive calculations for experimental proposals.

Applications of TRANSP (cont.)

- Many groups report use of TRANSP results in conference papers and refereed journal articles.
- Two examples follow:
  - Tritium Transport on JET (I. Voitsekovitch).
  - NPA Simulations on NSTX (S. Medley).
- Numerous other examples could have been chosen.

TRANSP at JET

Trace Tritium: Thermal Tritium Transport:

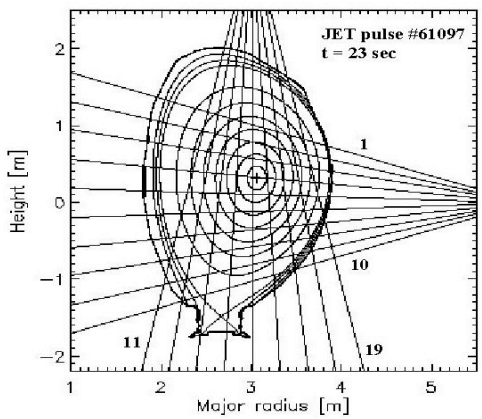

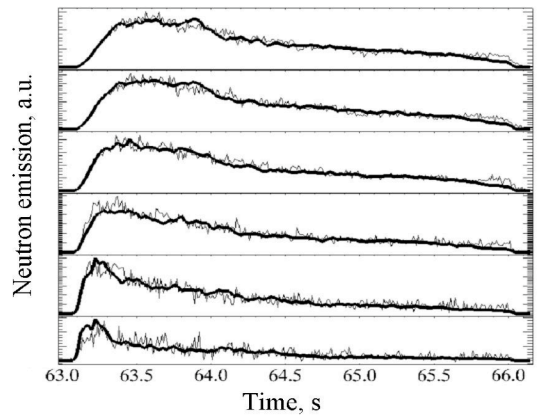

14 MeV neutrons measured along 19 chords (left) are reproduced in TRANSP by using a proper adjustment of Tritium transport coefficients (right, 6 bottom chords are shown)

2 techniques have been used: (1) Dt and Vt are adjusted in TRANSP; (2) novel use - combined TRANSP/SANCO analysis – plasma reactivity is extracted from TRANSP using 20 runs and transmitted to SANCO for automatic estimation of Dt and Vt by minimising χ^2-value

Publications: K.-D. Zastrow and JET team (EPS 2004, PPCF, 2004 in press), I. Voitsekhovitch, et al., *Trace Tritium transport in H-mode JET plasma with different density,* JET pinboard, waiting for clearance, to be submitted to Phys. Plasmas and also in EPS 2004; J. Mailloux et al, EPS 2004; P. Belo et al., EPS 2004; D. Stork and JET team, IAEA 2004; D. Stork and JET team, APS 2004

MHD-Induced Fast Ion Losses in NSTX

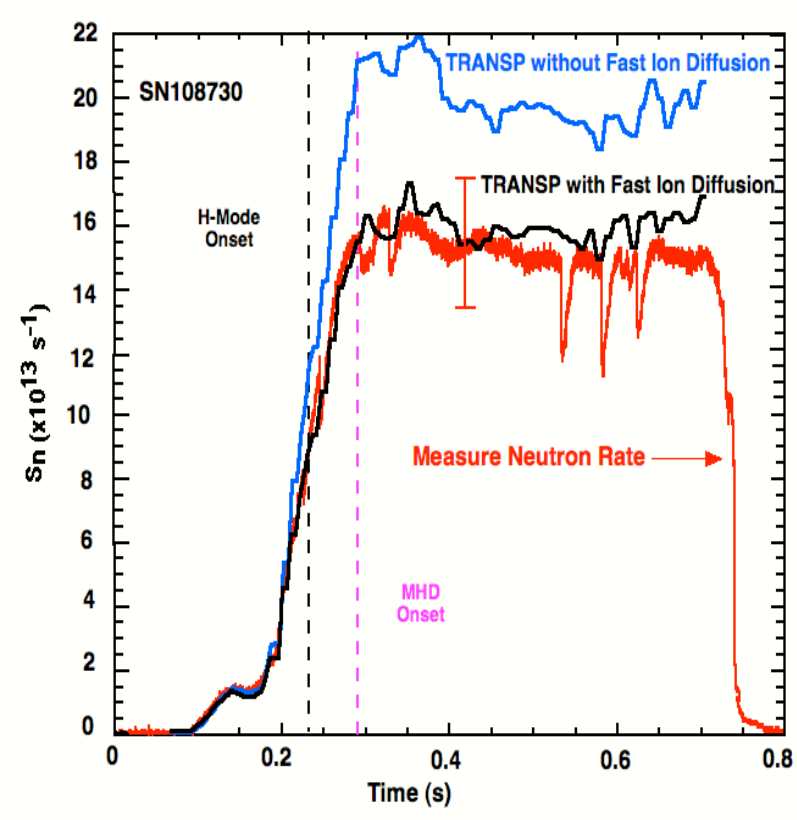

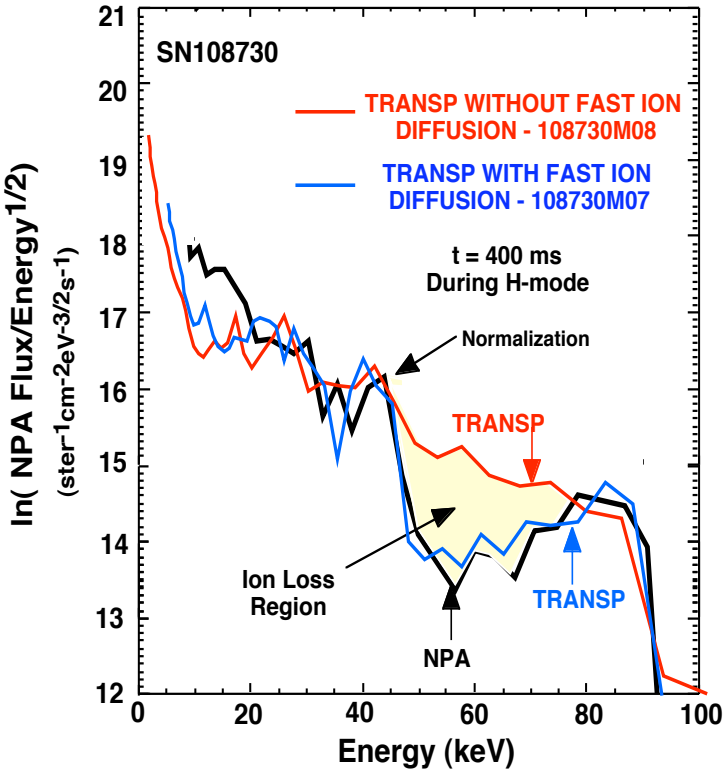

S. Medley et al., Nucl. Fusion **44**(2004)

TRANSP Code Development Process

- New physics capabilities are…
  - developed by PPPL team
  - or by collaborations using cvs-shared common source.
- Initial testing carried out by developer.
- Longer term testing: run production, using data from all participating experiments.
- FusionGrid operation naturally leads to extensive testing and validation.

TRANSP Operational Testing

- Trouble shooting:
  - ~150 crashed TRANSP runs over the last 12 months. Causes:
    - Data or namelist errors (~40%)*
    - Problems with code or physics model (~50%)*
    - System or network problems (~10%)*
  - Repairs possible in many cases.
  - PPPL TRANSP team expended ~1.5 FTE investigating and fixing crashed runs in FY04.
  - Result: quality improvements for all users.

*rough estimates

New Features & Improvements

- MHD equilibrium reconstruction:
  - latest ESC from L. Zakharov.
  - many fixes (e.g. RZsolver psi-contouring).
  - improvements to error detection & handling.
  - robustness issue: progress, not perfection…
- GA-Toray (ECH/ECCD)
  - in use for DIII-D, HL2A and ITER simulations.
- NCLASS
  - ncmodel=2 gives the latest NTCC f90 version.
  - ncmodel=1 gives the legacy f77 version.

NUBEAM Development

- CPC paper– PPPL/Lehigh Collaboration; 1st publication on NUBEAM in 20 years:
  - A. Pankin et al., "The Tokamak Monte Carlo Fast Ion Module NUBEAM in the NTCC library", CPC **159**, No. 3 (2004) 157-184.
- Entire NUBEAM code converted to real*8 precision / "implicit NONE".
- NUBEAM MPI parallelization under way.

ICRF Development

- RFXQLO module—
  - defines interface for separation of wave code from FP or transport code driver.
  - subroutine library or file based process-to-process communication.
  - arbitrary number of antennas
    - each with an arbitrary N_phi spectrum.
  - BUT the FP quasilinear operator (QLO), and many other pieces, still need work…

Desired RF Solver Architecture

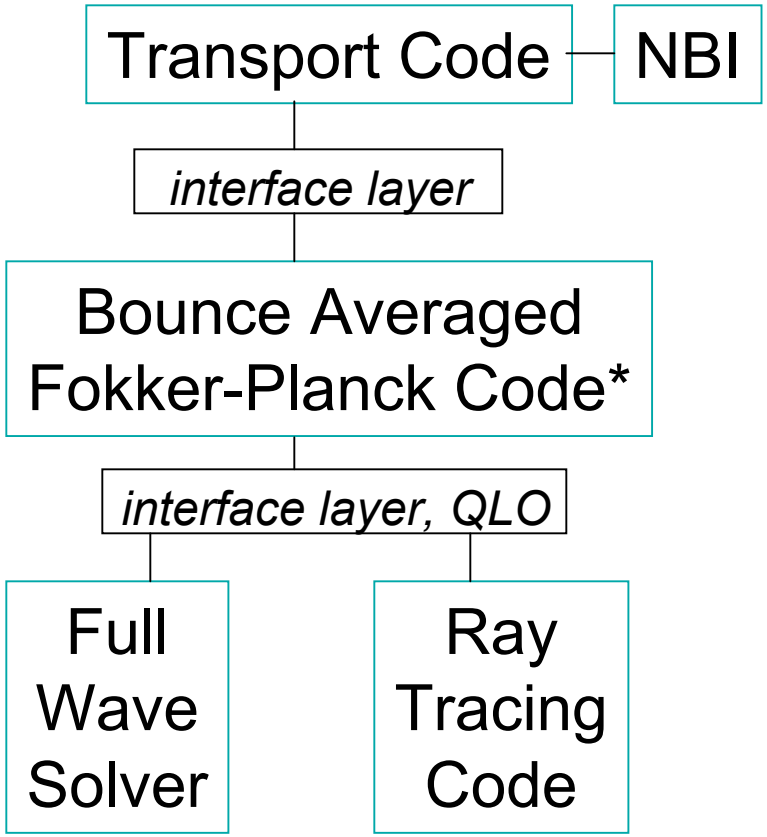

Requirements:

- Minority Specie, or…
- Neutral Beam source, or…
- Fusion Product source;
- ICRF/ICCD – good QLO
    - power & momentum
    - unbalanced N_phi OK
- Full wave or Ray Tracing
- Output real space f
    - fast ion fusion
    - NPA simulation
    - fast ion driven modes
- Fast electrons
- LHCD, ECH/ECCD, …

***TRANSP legacy, FPPMOD, does not meet requirements. Other options: CQL3D, …?**

Between-Shots TRANSP

- NBI time slice (FusionGrid configuration) tested on DIII-D data– 5 minute turnaround.
  - EFIT equilibrium timeslice extraction using "scrunch2":
    - No time variation– speed advantage.
    - Skip reconstruction inside TRANSP; more robust.
  - Network i/o optimization:
    - Send Ufiles & namelist as tar.gz input file.
    - Receive MDSplus trees in tar.gz output file.
    - Faster, more robust; would also benefit normal use.

Client Software Improvements

- xtranspin GUI program upgrade:
  - "Minimal edit" algorithm for namelist changes.
  - Namelist comments and ordering preserved.
- ElVis (java-based scientific graphics):
  - ElVis output options now in **rplot**, **trdat**, **trxpl**.
  - Wide area collaborative sharing of ElVis scientific graphics displays.
  - *See the FusionGrid Demo (E. Feibush, PPPL).*
- Ongoing development of TRANSP website.

Simple ElVis Monitor Example.

access via http://w3.pppl.gov/TRANSP

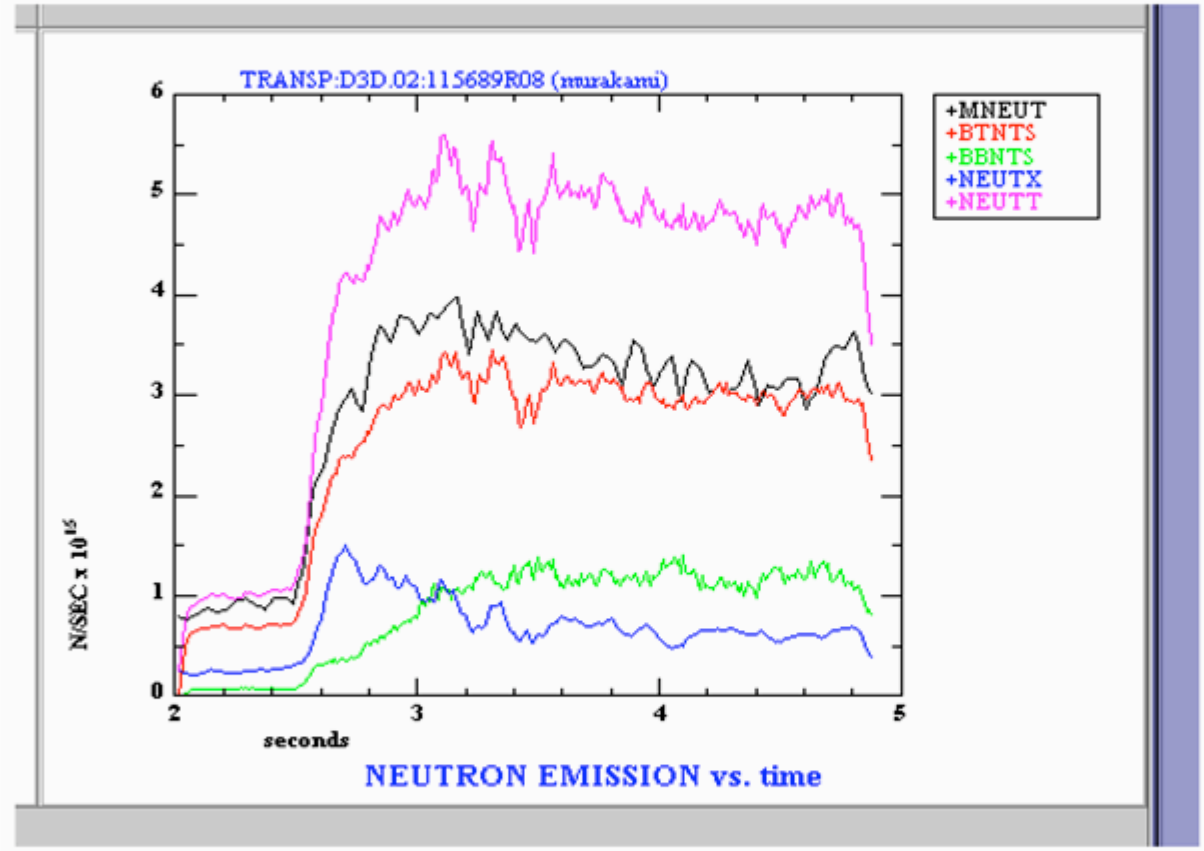

ElVis plot is updated as TRANSP run advances.

R. Andre
E. Feibush
S. Klasky
D. McCune

Run data viewed in IE, after clicking on "view data" link under Run-specific information in the GA Fusion Grid Monitor.

TRANSP/TSC

- TRANSP can now read the output of TSC free boundary predictive simulations.
  - The data is analyzed as if from an experiment.
  - Neutral beam and RF heating and current drive and fusion products can be calculated.
  - ITER Results presented at Oct. 2004 ITPA.
- Separate TSC and TRANSP runs now.
- Time dependent coupling proposed.

Proposed Integrated Plasma Simulator utilizing TSC/TRANSP

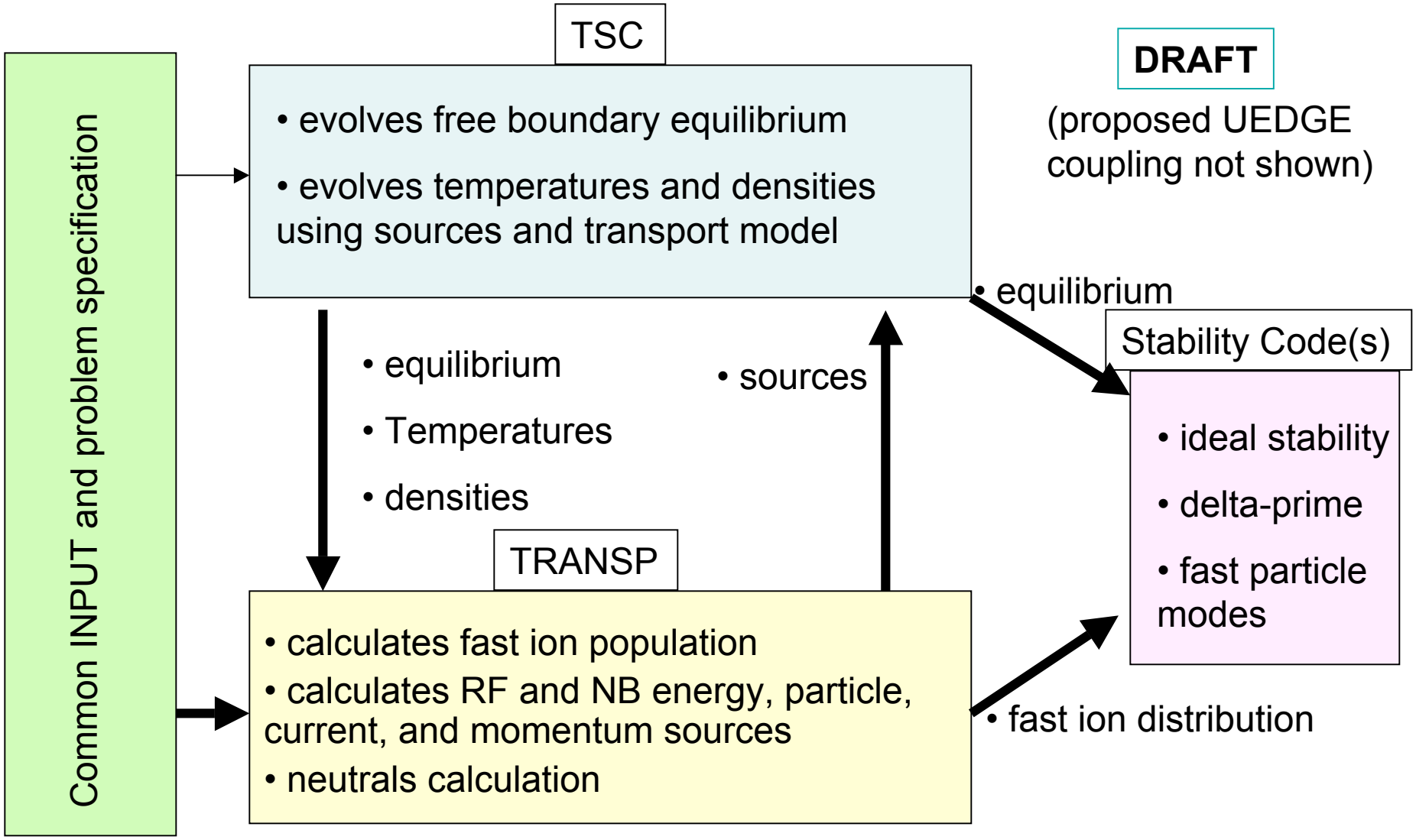

User Access via FusionGrid

TSC/TRANSP ITER Simulation

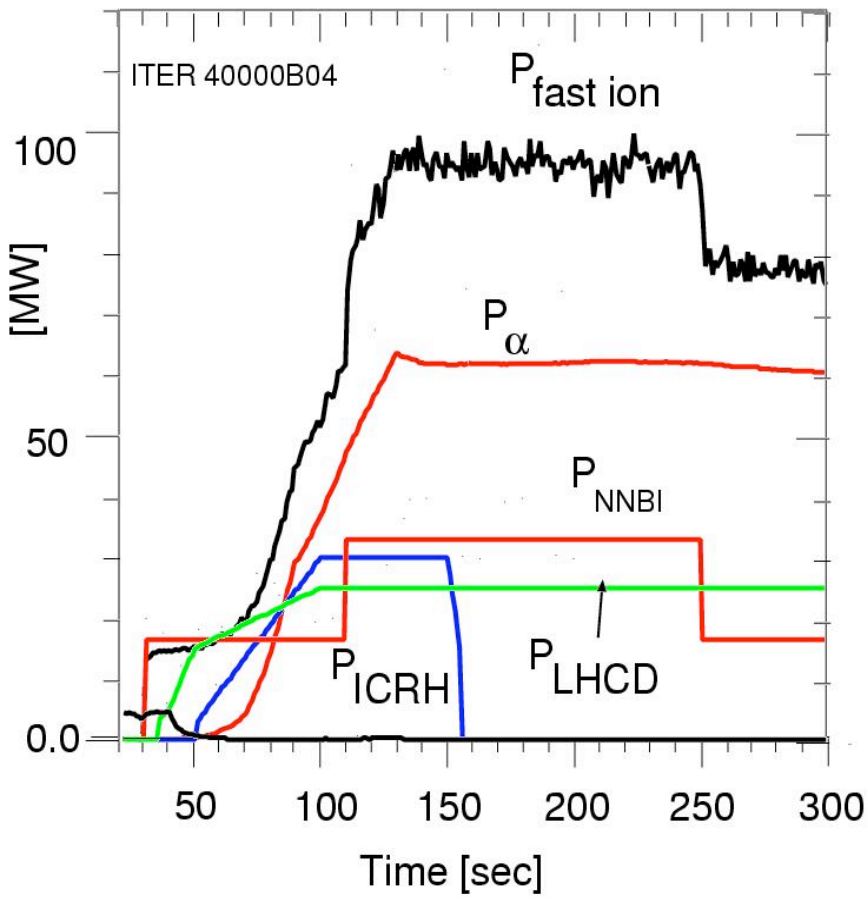

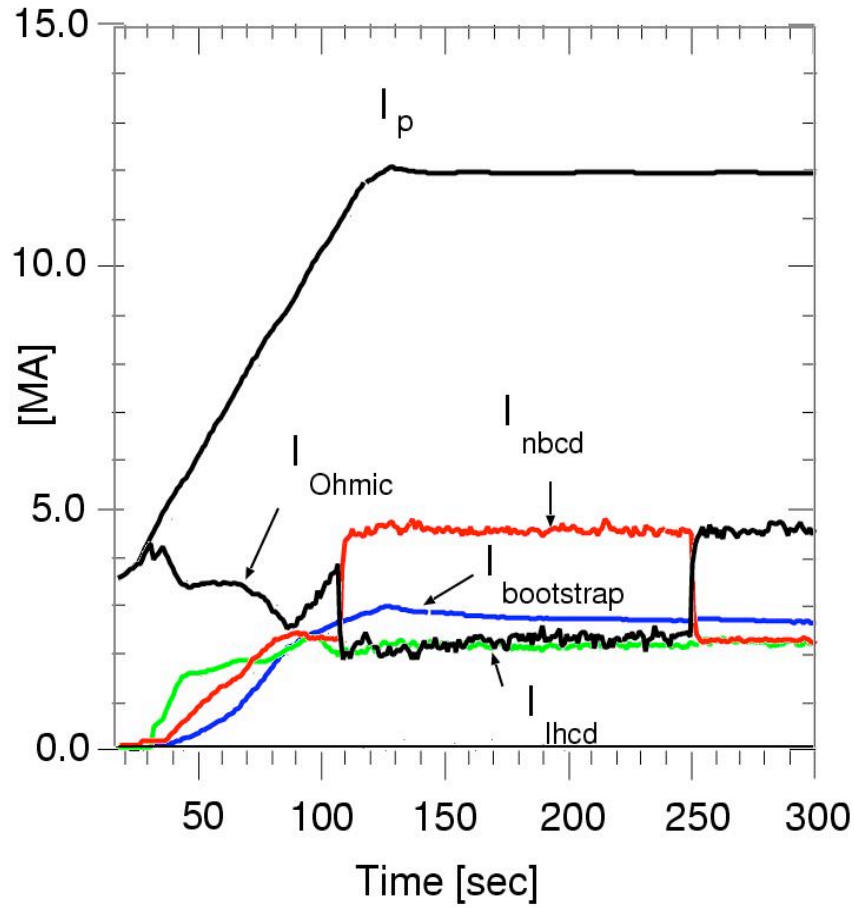

R. Budny, 2004 ITPA

Challenges

- STs:
  - Robustness of MHD equilibrium reconstruction
  - *RF models need a lot of work*
  - centrifugally driven poloidal density asymmetry
- Tokamaks:
  - *RF models need a lot of work*
  - RF resonant beam ions and fusion products
  - NCLASS: inclusion of beam torques

NSTX Laundry List

- Direct use of MSE data to evolve current profile and equilibrium.
- Inclusion of rotation effects in equilibrium.
- Allow all thermal specie densities to vary poloidally as well as radially (!).
- HHFW RF heating and current drive with TORIC-4.
- EBW and additional RF options soon…

JET Laundry List

- FP synergistic treatment of NBI and ICRH
- Improvements to TRANSP documentation
- Improve TRANSP predictive capabilities: predict density evolution; greater flexibility and ease-of-use.
- Inclusion of beam torques in NCLASS.
- Sawtooth model: partial reconnection for fast ions (done).

Other Requests

- Improvements to TRANSP ease-of-use:
  - xtranspin needs to be brought up-to-date.
  - documentation, again…
- Web-based client options:
  - very simple data and run preparation capability for time slices.
  - between-shots time slice analysis capability.
- Optimization of performance for predictive simulation.

What Else?

TRANSP Group Needs Help

- Ongoing collaboration with theorists:
  - validation/verification of physics models.
- And with experimentalists:
  - validation/verification of physics models.
- And with code developers:
  - PPPL team cannot meet every need.
  - Code development collaborations are sought:
    - JET, MAST, Asdex-U, C-Mod, DIII-D, …
    - Theorists, Experimentalists, Computationalists…

Future Plans

- Continued Development of:
  - TRANSP physics models
  - TRANSP operational capabilities
  - TRANSP client software
- You, the users, set the priorities…
  - Subject to funding constraints
- *Let's talk about it…*