Observations with a Mach probe on edge plasma of the CDX-U

R. J. Armstrong,[a] W. Choe, Y. S. Hwang,[b] E. Lo, and M. Ono
Princeton Plasma Physics Laboratory, Princeton University, Princeton, New Jersey 08543

(Presented on 15 May 1996)

Using a rotatable three-electrode Mach probe at the outer edge region of the plasma, preliminary observations indicate the existence of a toroidal rotation in the ion flow direction (of the toroidal current) with no comparable poloidal rotation. This rotation cannot be in the direction of the magnetic field, because of the large pitch of the local magnetic field. © *1997 American Institute of Physics.* [S0034-6748(97)66101-8]

I. INTRODUCTION

Using the Mach probe[1] built[2] for the CDX-U machine in 1990, we have made measurements of ion saturation current in the upgrade version of the machine with toroidal discharge currents now approaching 100 kA. The previous measurements in 1991 were performed on plasmas with usually about 100 A toroidal current with a few cases approaching 2 kA. For the present conditions, on account of the larger plasma density, the uncooled probe was limited to an edge position to avoid probe deterioration and its consequences. We have taken a series of observations to map out the presence of rotation, examining both toroidal and poloidal directions.

II. EXPERIMENTAL METHOD

The probe is shown in Fig. 1. The probe was positioned 2.5 cm inside the last closed flux surface, determined by a limiter. There are now only three tungsten electrodes of lengths 3.1, 3.8, and 3.9 mm backed by a 15 cm long alumina former, recessed at the free end to provide a mount for the three electrodes; each presenting a half cylinder to the plasma. Each electrode in turn is biased negatively to 40 V to accept positive ion current. Edge plasma temperature is clearly low enough and electron beam activity is believed negligible so that the electrode current may be dominated by the ion contribution. Because of the radial insertion, the probe area is not significantly exposed to core radiation and, therefore, should not have a sizable photoelectric emission. Triax screened cables were used for signal transfer.

The plasma for this study was produced, using hydrogen, in the CDX-U vacuum vessel as modified in 1993.[3] Briefly, it is (or rather was, since it now is in the process of being rebuilt) a tight toroid with plasma major and minor radii 0.35 and 0.22 m and height 0.9 m. The wall is 3.75 cm thick and is made of aluminum. There are 16 toroidal field coils. The outer wall is a polygon with 16 vertical sides. Plasma is produced by an Ohmic coil wound on the slender center stack assisted by ECR preionization at a radius determined by the toroidal field. All the systems involved in the operation of the device as a tokamak are pulsed: toroidal and poloidal magnetic fields, two-part Ohmic transformer (OH) and ECR microwave power. In contrast, the probe is fed from a Kepco dc bipolar power supply (type BOP 200-1M). Current is measured by the voltage fall over a noninductive 10 Ω series resistor. The signal is then fed as a differential input to the preamplifier type 7A22 on the Tektronix oscilloscope type 7623. Then the Z output of the preamplifier is taken to the Camac controlled analog-to-digital converter where the digital output signal is sent to the dedicated work station on the local SUN SPARC cluster. Real time presentation is given by the 7623 oscilloscope and by Apple terminal rendition (digital-to-analog conversion) of the work station data. Various other diagnostics are in place, but not all are simultaneously employed. Among these were stripped C and O optical emissions (core and edge origins in a first approximation), phase contrast imaging, edge magnetic loops, limiter current measurement devices, Thomson scattering, and a 140 GHz interferometer.

In spite of the extreme conditions prevailing, it was surprising how relatively free of sputtering and other surface effects the probe surface remained. Thus, an edge plasma for a toroidal current of the order of 70 kA gave less overall probe contamination and degeneration than in the previous measurements,[2] which in contrast extended over the full cross section of the plasma.

III. MEASUREMENTS

The measurements with the Mach probe were concentrated on the toroidal and poloidal directions, although because of the probe's rotational freedom, measurements in other directions were possible. Only one electrode was used at a time, with the other inactive electrodes decoupled and, therefore, at floating potential. A typical series of observations involved the four orientations of each electrode at angles 0°, 90°, 180°, and 270° to the toroidal direction. This gave, in principle, three measurements of both rotations. The oscilloscope presentation enabled a quick look estimate of the probe currents. Use was also made of the preamplifier's bandpass filter. There was a choice of digitizing equipment. The fastest sampled at 0.5 MHz and the slowest at 0.1 MHz. Using the part of the characteristic from −40.5 V to +5.5 V in the conventional Langmuir method yielded an electron temperature of approximately 15 eV (Fig. 2). A better fit to a log linear relationship was obtained if it was assumed that even at −40.5 V there was still a considerable electron component on the order of 15% of the total current. Using this value of T_e in the formula for ion saturation current

[a]Presently at: University of Tromso, Tromso, Norway; Electronic mail: richarda@mitra.phys.uit.no
[b]Presently at: Korea Advanced Institute of Science and Technology, Seoul, Korea.

 © 1997 American Institute of Physics

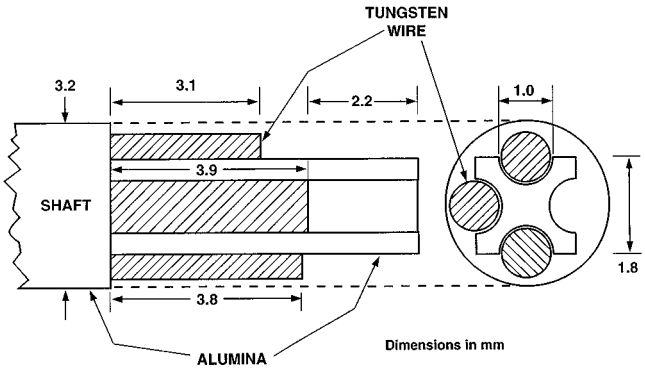

FIG. 1. The geometry of the probe. Three exposed (50%) 1 mm diam tungsten wires project into the plasma on a 3.2 mm diam alumina former.

$$i_+ = 0.57 n_e e \left(\frac{k[T_e + \gamma T_i]}{M} \right)^{1/2} A, \tag{1}$$

and assuming $T_i \sim T_e$, $\gamma \sim 1$, then yielded a value for n_e of approximately 3.4×10^{12} cm^{-3}, which is compatible with the interferometrically deduced value of electron density. It may be large in comparison to edge values in large aspect ratio devices with similar power input. The projected area, A, was equal to 3.8×10^{-6} m^{-3}; M was taken to be the proton mass. A significant ion temperature greater than T_e might alter the form of Eq. (1), but there is no clear evidence from simulations for any such change. A plot of current to the two electrodes in the toroidal direction is shown in Fig. 3. These pairs of traces were not taken during the same pulse as we have not yet obtained simultaneous recording. However, the interval between observations was short (230 s), and the forms obtained seemed to be broadly repeatable.

The detected currents are by no means constant but vary similarly from pulse to pulse, but with different amplitudes for the ion and electron toroidal directions. The full and dotted lines in Fig. 3 show ion and electron currents and corresponding plasma currents. The ion channel shows the larger signal at all times in the pulse, before the onset of the supposed internal reconnection event (IRE).[4] The responses to the IREs and subsequent smaller increases seem to be more equal.

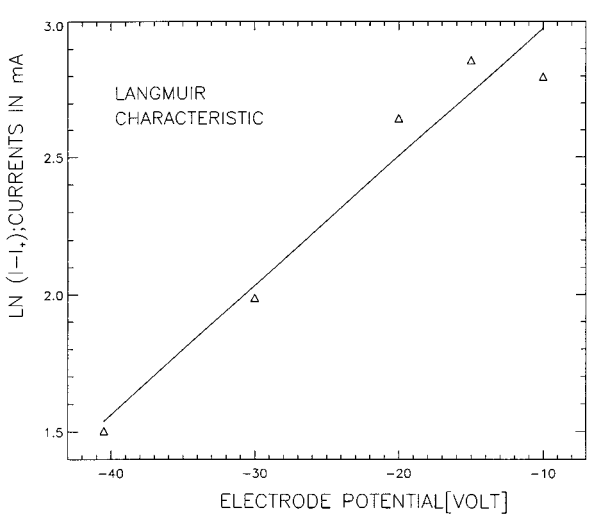

FIG. 2. Langmuir characteristic for a single electrode. Note that the electrode current is positive for all electrode potentials.

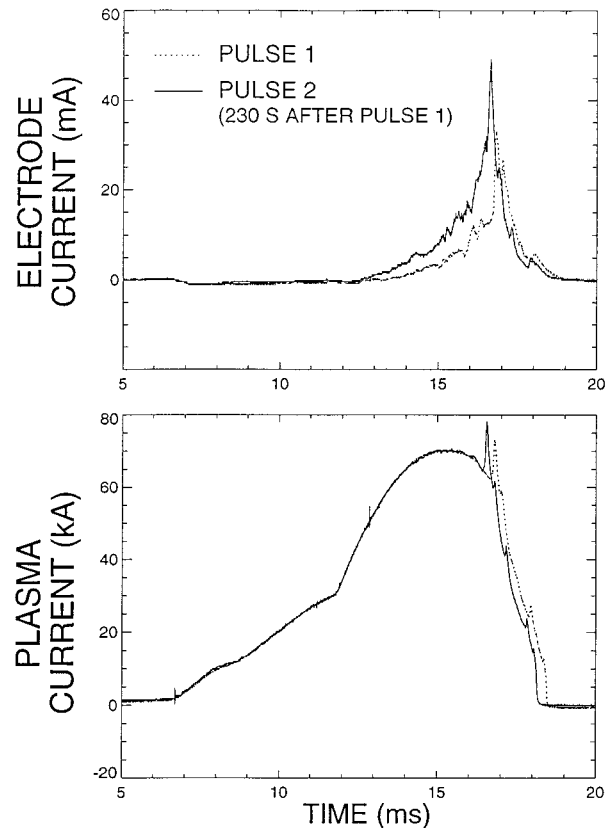

FIG. 3. Currents to electrodes facing opposite toroidal directions together with plasma currents determined by the use of the Rogowski coil. The dotted lines show electrode current (upper window) and plasma current (lower window) when the electrode faces the electron flow. The full lines show the same quantities when the electrode faces the ion flow.

In Fig. 3, the relation of the electrode currents to the plasma current is not simple. There is a very small almost constant electrode current until after the second OH supply is coupled in, when the current begins to rise rapidly. The current rises rather linearly with the integrated electron density as measured by the 140 GHz interferometer (Fig. 4).

IV. ERRORS AND UNCERTAINTIES

The rotational accuracy was about 10° and could be improved greatly. Capacitative pick up by the leads to the probe is thought to be small in that the probe is only at the edge of the plasma. Thus, the alumina arm sees only tenuous scrape-off plasma inside the 5 cm diam stainless steel cylinder that shields the probe and permits its movement. The sensitivity of the ion probe signal to rotation of the probe would seem to rule out gross rf interference at the electrodes. There is also the possibility of pick up along the connection from probe to triax connector, at the remote (from the plasma) end of the probe assembly. By setting one end of an unshielded resistor to earth at this point and observing the voltage at the other end, an attempt was made to see if there was noise interference at the transition from (shielded) probe structure to cable. No interference was found. The resistor for this test

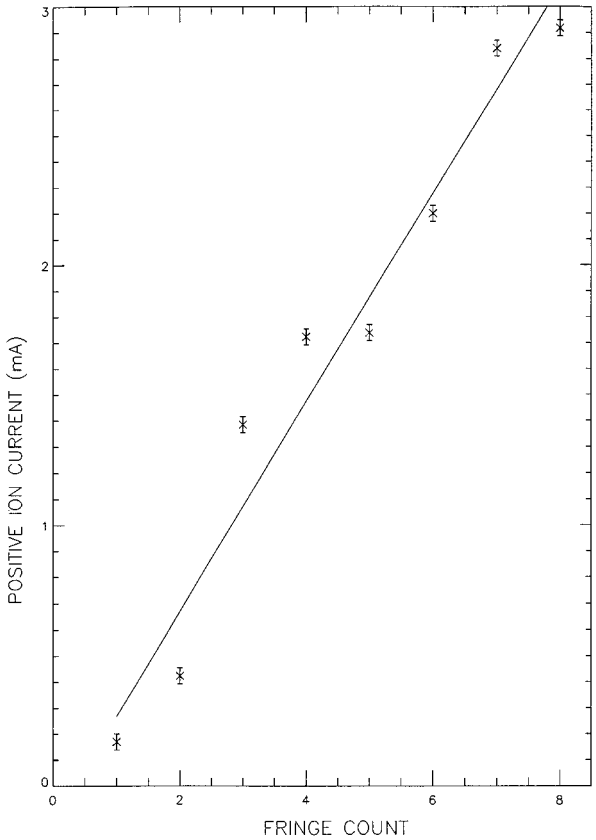

FIG. 4. Correlation of electrode current (facing flow) with interferometer fringe count. The interferometer measures integrated electron density along a vertical chord through the center of the plasma. One fringe represents approximately 10^{18} electrons m^{-2}. Pulse-to-pulse variation accounts for the poor linear fit.

was chosen to be equal to the typical voltage applied to the probe divided by the typical current from the plasma.

V. DISCUSSION AND ANALYSIS

The curves in Fig. 3 are typical of many observations. The ion current direction signal is larger than the other, indicating that the flow is in the ion current direction. Using the calibrated analysis[2] for flow, we obtain a value for the flow velocity, v, of about 6×10^3 ms^{-1}. This assumes that the analysis is valid for the present conditions. We have also the analysis by Chung and Hutchinson[5] for flow parallel to the direction of the magnetic field. This yields a value for the Mach number, M, of the flow. Therefore, combining our knowledge of v and M, we derive the thermal velocity of the ions and, so, directly their temperature. We obtain a value of about 4 eV for this, yielding a ratio of T_e/T_i of about 4 when we use the single electrode, sweep determination of T_e given in Sec. III. Note that we neglect the presence of ions other than protons, and assume a Maxwellian population. The direction of the total B field at the probe can be obtained from the local $q(a)$ value. It is at an angle $\tan^{-1}(B_p/B_T)$ to the toroidal direction where $q_{\mathrm{cyl}}=B_T a/B_p R$. For $q(a)$, we obtain approximately 3.5 giving an angle between 25° and 43° with the toroidal direction. With the exception of one doubtful case, all evidence of flow, i.e., where we obtain unequal current strengths at 180° angular separation, is in the toroidal direction. Our directional accuracy though poor, being ±10°, gives an error angle much less than the angle the total magnetic field makes with the toroidal direction. Therefore, we conclude the flow can not be predominantly along the direction of the magnetic field.

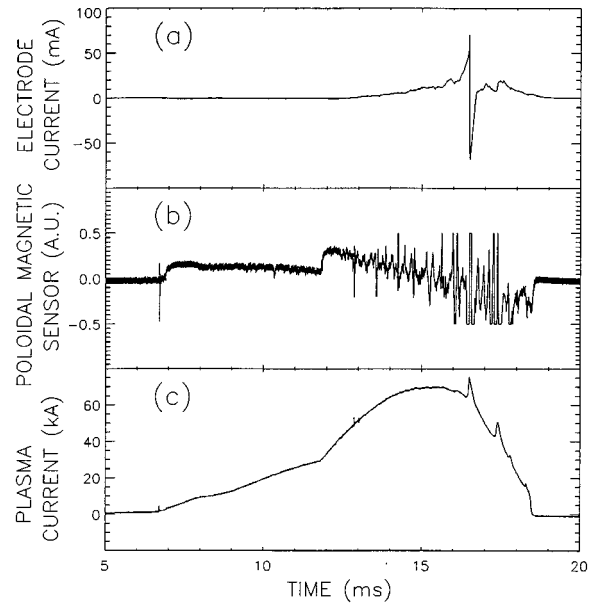

FIG. 5. Electrode current showing negative transient (a). Trace (b) shows the response of a poloidally oriented magnetic sensor and (c) shows the plasma current. When the transient occurs on (a), the magnetic sensor shows a strong perturbation, into saturation, while the plasma current shows an increase corresponding to an IRE event.

In some measurements, there is a severe transient in the probe signal as shown in Fig. 5. Usually the apparent excursion into electron current coincides with a reconnection event (as is the case here) and may be evidence for runaway electrons.

We now turn to a brief consideration of the poloidal direction. There seems to be no preferred up or down motion. Fluctuating drifts of about 10% of the toroidal flow appear to exist.

VI. CONCLUSIONS

On all confirmed measurements examined thus far, an edge toroidal rotation was greatly in excess of any poloidal rotation, assuming that calibration was not very different for the two directions. In this low aspect ratio device, the field lines deviate by at least 25° at the edge from the toroidal direction for the parameters we have used. Therefore, the flow is not constrained by the field line direction. A large value for the edge electron density was deduced that is, however, comparable with that obtained from the 140 GHz interferometer. A value for the local ion temperature, appreciably less than the electron temperature, was deduced from the measurements. A possible large Z_{eff} could remove this disparity in temperatures.

ACKNOWLEDGMENTS

This work was supported by U.S. Department of Energy Contract No. DE-AC02-76CHO3073. One of the authors

(R.A.) acknowledges financial and computational (Program for Supercomputing) support from the Research Council of Norway and the hospitality of the CDX-U group at PPPL.

[1] C. S. MacLatchy, C. Boucher, D. A. Poirier, and J. Gunn, Rev. Sci. Instrum. **63,** 3923 (1992); R. Back and R. D. Bengtson, *ibid.* these proceedings.

[2] R. J. Armstrong and D. S. Darrow, Nucl. Fusion **34,** 1532 (1994).

[3] Y. S. Hwang, Thesis, Princeton University (1993); T. G. Jones, Thesis, Princeton University (1995); W. Choe, Thesis, Princeton University (1996).

[4] M. Ono *et al.*, Conference on Plasma Physics and Controlled Nuclear Fusion 1996, IAEA, Montreal, Canada.

[5] K.-S. Chung and I. H. Hutchinson, Phys. Fluids B **3,** 3053 (1991).