New electron cyclotron emission diagnostic for measurement of temperature based upon the electron Bernstein wave

P. C. Efthimion, J. C. Hosea, R. Kaita, R. Majeski, and G. Taylor
Princeton University Plasma Physics Lab, Princeton, New Jersey 08543

(Presented on 10 June 1998)

Most magnetically confined plasma devices cannot take advantage of standard electron cyclotron emission (ECE) diagnostics to measure temperature. They either operate at high density relative to their magnetic field (e.g., $\omega_p \gg \Omega_c$ in spherical tokamaks) or they do not have sufficient density and temperature to reach the blackbody condition ($\tau > 2$). The standard ECE technique measures the electromagnetic waves emanating from the plasma. Here we propose to measure electron Bernstein waves (EBW) to ascertain the local electron temperature in these plasmas. The optical thickness of EBW is extremely high because it is an electrostatic wave with a large k_i. For example, the National Spherical Torus Experiment (NSTX) will have an optical thickness $\tau \approx 3000$ and CDX-U will have $\tau \approx 300$. One can reach the blackbody condition with a plasma density $\approx 10^{11}$ cm^{-3} and $T_e \approx 1$ eV. This makes it attractive to most plasma devices. The serious issue with using EBW is the wave accessibility for the emission measurement. Simple accessibility arguments indicate the wave may be accessible by either direct coupling or mode conversion through an extremely narrow layer ($\approx$1–2 mm). EBW experiments on the Current Drive Experiment-Upgrade (CDX-U) will test the accessibility properties of the spherical tokamak configuration. © *1999 American Institute of Physics.* [S0034-6748(99)74201-2]

The advent of electron cyclotron emission (ECE) diagnostics for magnetic fusion plasmas has made it possible for the time evolution of the electron temperature profile to be measured with moderately priced microwave and millimeter wave technology.[1–3] ECE measurements with excellent temporal and spatial resolution have facilitated the study of plasma transport and magnetohydrodynamic (MHD) fluctuations. Two criteria must be satisfied for the application of ECE diagnostics: satisfactory wave damping and accessibility. The accessibility criteria limits the application to moderate β plasmas where $\Omega_{ce} > \omega_{pe}$ for the ordinary mode (O-mode) fundamental and $\omega_{pe}^2/\omega^2 < 1 - \Omega_{ce}/\omega$ for the second harmonic extraordinary mode (X mode), where Ω_{ce} is the electron cyclotron frequency, ω_{pe} is the electron plasma frequency, and ω is the wave frequency. The wave damping requires the optical thickness $\tau > 2$ for the ECE to be at the blackbody level and proportional to the electron temperature. Consequently, only high temperature plasmas ($T_e > 1$ keV) with low β such as found in tokamaks and stellerators can meet the criteria. Many magnetized plasmas cannot utilize the technique. The inverse process of heating a plasma near the electron cyclotron frequency is governed by the same issues.

A new toroidal configuration, the spherical torus, is being investigated as an alternate magnetic confinement concept. The first such device, START,[4] has achieved high densities with a modest toroidal magnetic field. Core densities of 3×10^{13} cm^{-3} are routine and 10^{14} cm^{-3} has been achieved with magnetic fields $B_\phi = 0.2$–0.6 T. Similar conditions are expected for NSTX.[5] Such conditions translate into $\omega_{pe}/\Omega_{ce} \gg 1$. The characteristic frequencies for NSTX are shown in Fig. 1. Note the plasma frequency is larger than the first electron cyclotron frequencies at every radius except near the inner plasma edge. The cutoff for the extraordinary mode is even larger than the plasma frequency. Therefore, at each radius of the NSTX plasma except near the inner plasma edge, the plasma cannot support electromagnetic waves for the first five electron cyclotron harmonics and electromagnetic radiation is not generated from these electron cyclotron harmonics. However, electron Berstein waves (EBW) can be generated and can propagate in the plasma as will be described later. Although very high harmonic electromagnetic radiation is accessible, it is far from the black-

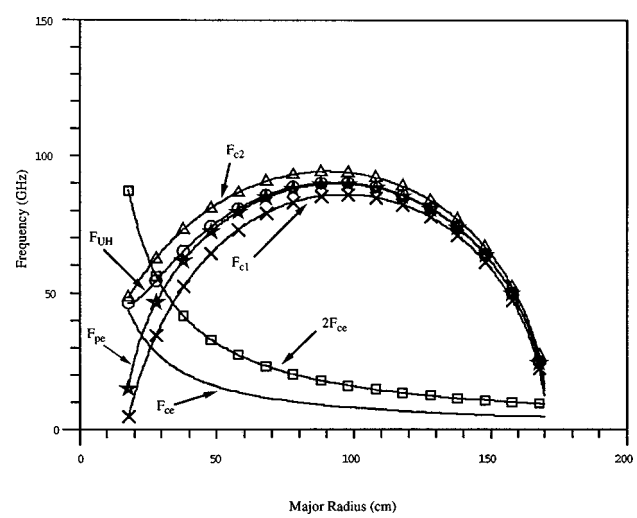

FIG. 1. Characteristic frequencies in NSTX vs major radius. F_{ce} is the electron cyclotron frequency, F_{UH} is the upper hybrid frequency, F_{c1} is the lower X-mode cutoff frequency, and F_{c2} is the upper X-mode cutoff frequency.

 © 1999 American Institute of Physics

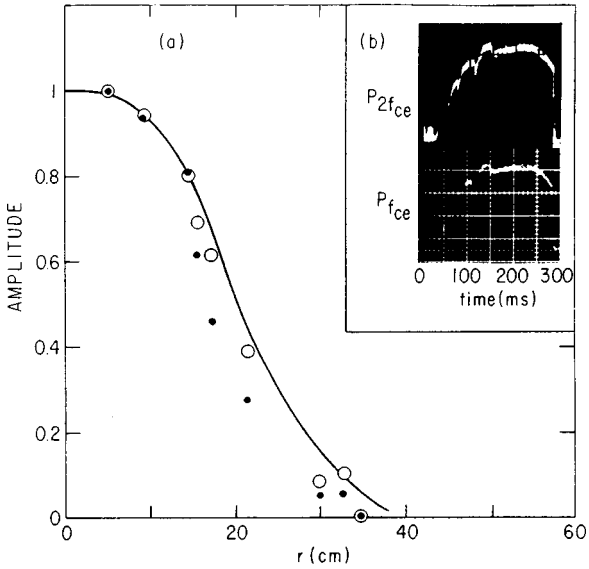

FIG. 2. Electron cyclotron emission profiles on PLT for f_{ce} (○) and $2f_{ce}$ (●) emission. The average Thomson scattering profile (—) is shown for comparison $[T_e(0)=1\ \text{keV}]$.

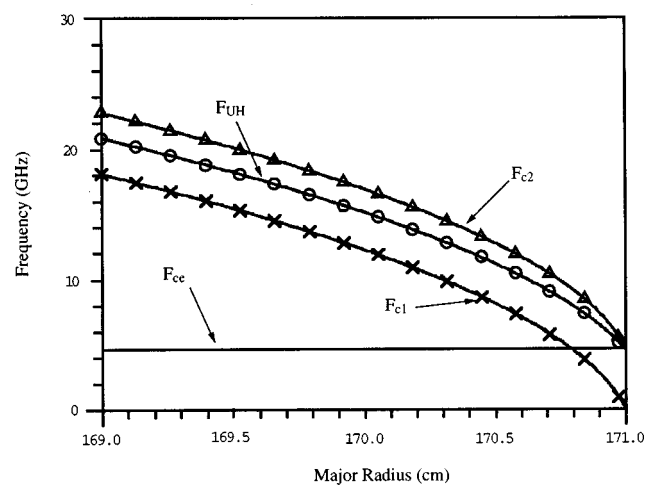

FIG. 3. Characteristic frequencies for NSTX vs major radius. The characteristic frequencies are within a few millimeters of the plasma edge indicating the possibility of direct coupling of the electron Bernstein wave to a slow wave antenna at the plasma edge.

body condition necessary for the measurement of temperature or for effective electron heating with microwave frequencies.

On Princeton Large Torus (PLT), the early electron cyclotron emission measurements by Hosea, Arunasalam, and Cano indicated that the extraordinary mode fundamental ECE, $\omega=\Omega_{ce}$, is capable of determining the electron temperature.[6] In Fig. 2 their data shows the emission intensity for the fundamental extraordinary wave measured from the high field side of the tokamak was equal to the blackbody emission level of the second harmonic extraordinary mode. The emission intensities for both modes are proportional to the electron temperatures measured by Thomson scattering. Their explanation for the blackbody fundamental electron cyclotron emission invokes (EBW) emitting at blackbody levels, propagating to the upper hybrid layer, and mode converting into extraordinary mode emission. Their analysis of the EBW absorbtivity can be utilized for the development of an electron temperature diagnostic on NSTX, and the verification of EBW physics necessary to consider electron heating and current drive at the electron cyclotron range of frequencies.

From the electrostatic dispersion relation for a collisionless hot plasma in Bekefi[7] and Stix[8] one can easily calculate the real and imaginary wave number for this range of frequencies:

$$\mathrm{Re}[k_{\mathrm{perp}}]\approx(4/\pi^{1/2})^{1/3}(\Omega_{ce}/V_T)(\omega_{pe}^2/[\omega^2-(\Omega_{ce}-\Delta\Omega_{ce})^2])^{1/3},$$

$$\mathrm{Im}[k_{\mathrm{perp}}]\approx A\pi^{1/2}\omega_{pe}^2\Omega_{ce}^2/\mathrm{Re}[k_{\mathrm{perp}}^2]V_T^3,$$

where $\Delta\Omega_{ce}=\Omega_{ce}V_T^2/c^2$, V_T is the electron thermal velocity, and $A=F(\omega,\Omega_{ce},T_e)$ and is defined in Ref. 1.

From these equations, the wave propagation can be calculated from $\mathrm{Re}[k_{\mathrm{perp}}]$. For $\omega=\omega_{ce}$, the optical thickness, τ, can be calculated from $\mathrm{Im}[k_{\mathrm{perp}}]$ for various machines. For PLT, the optical thickness is on the order of 10 000. Interestingly enough the optical thickness for NSTX is 3000. For NSTX, the entire plasma diameter is highly absorptive to EBW, and the emission easily meets the blackbody condition for measuring electron temperature, $\tau>2$. The plasmas of these machines should also be optically thick for second harmonic electron Berstein waves. The high absorptivity makes EBW extremely attractive for electron cyclotron resonant heating and current drive on these machines. Furthermore, the high absorptivity for EBW permits any magnetized plasma with an electron density, $n_e\geqslant 10^{11}\ \mathrm{cm}^{-3}$, and an electron temperature, $T_e\geqslant 1$ eV, to satisfy the blackbody criterion. Therefore, many magnetized plasmas meet the blackbody condition which allows EBW electron temperature diagnostic measurements, or EBW heating and current drive to be employed.

Simple accessibility arguments indicate that there are both direct and mode conversion schemes for accessing EBW emission from the electron cyclotron layer. The characteristic frequencies for NSTX near the plasma edge in Fig. 3 indicate the possibility of direct coupling with EBW. The coupling distance through the X-mode cutoff layers (F_{c1},F_{c2}) and upper hybrid layer is on the order of a few millimeters, allowing for direct coupling (evanescent) as is achieved with lower hybrid current drive with a slow wave antenna. One major difference is the EBW is an X-mode (E perpendicular to B) while the lower hybrid wave is an O mode (E parallel to B). Direct coupling will require an antenna that matches the low phase velocity of the electrostatic EBW similar to the coupling scheme for lower hybrid waves. A multiple element antenna array is normally used to create a low phase velocity k spectrum for lower hybrid wave coupling by adjusting the phase between the antenna elements.[9] However, electron temperature measurements may not require a narrow bandwidth k spectrum and thus, a two element antenna may be sufficient for coupling to the EBW. In the microwave range of frequencies waveguides are the antenna elements. Direct coupling would be favorable because

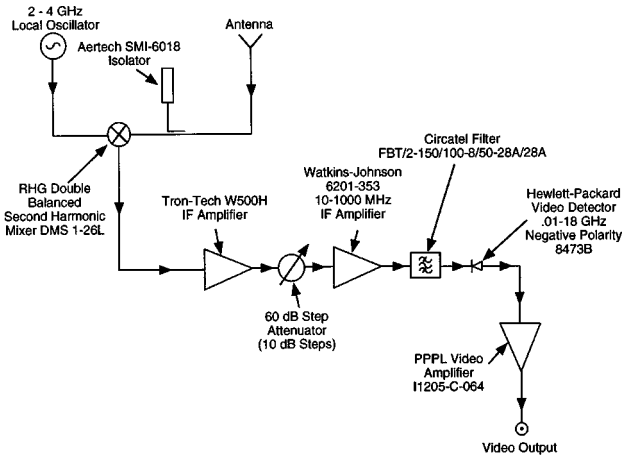

FIG. 4. Schematic diagram of the CDX-U EBW radiometer.

the coupling efficiency would not be very sensitive over the range of the electron cyclotron frequencies of interest. To achieve efficient direct coupling, the electric field from the antenna has to extend across the cutoffs and resonances shown in Fig. 3. This will require the antenna to be placed very close to the last closed flux surface where the plasma density $n_e \geqslant 5\times 10^{11}$ cm^{-3}. Alternately, one mode conversion scenario has the EBW propagate to the upper hybrid layer and mode convert to an electromagnetic X mode which propagates out of the plasma. This scenario has been studied by Bers.[10] Another mode conversion scheme has the EBW propagating to the upper hybrid layer, mode converting into an X-mode, tunneling through the cutoff layer and mode converting to the O mode at a turning point. This last coupling scheme was successfully used to heat W7-X above the density limit for the launched O mode.[11]

Given successful wave accessibility and absorptivity, a simple instrument can be placed on NSTX to measure the electron temperature. With the low magnetic fields in NSTX, an instrument would require low microwave frequencies (<40 GHz for the first and second harmonics) where the components are inexpensive and have very low noise characteristics compared to millimeter wave components. Both a scanning radiometer and a multichannel instrument to simultaneously measure temperature at multiple locations may be used to measure the electron temperature profile for transport studies and plasma MHD studies, respectively. Their conceptual designs are similar to millimeter wave instrumentation used on higher magnetic field plasmas, but utilize lower frequency components.

The optical thickness calculations indicate that much of the EBW physics, and the proof of principle for the electron temperature measurement, can be studied on CDX-U.[12] The CDX-U plasma has an optical thickness ≈300 and can be accessed with simple electromagnetic and electrostatic antennas. The emission frequencies for CDX-U are below 20 GHz. A heterodyne EBW radiometer is being installed on CDX-U (Fig. 4). A sweepable signal generator operating between 2 and 4 GHz provides a local oscillator to a second harmonic mixer. The signal from either a wide angle spiral, broadband antenna (AEL Colmar ASO-1503A), or an electrostatic waveguide antenna is mixed with the local oscillator. The output of the mixer is amplified and filtered in a double sideband intermediate frequency (IF) section. The output of the IF section is rectified by a video detector and amplified. The end result should be a measurement of the electron temperature on CDX-U using ECE from Bernstein waves. A successful program on CDX-U will support the installation of a similar instrument on NSTX to measure the electron temperature. This instrumentation would be used to study MHD and provide profile measurements for confinement studies. Furthermore, the emission measurements on CDX-U and then on NSTX are necessary steps for the serious consideration of EBW heating and current drive. The high absorptivity of EBW allows for the consideration of electron temperature measurement, electron heating, and current drive on modest magnetized plasmas ($n_e \geqslant 10^{11}$ cm^{-3} and $T_e \geqslant 1$ eV).

This work was supported by DOE Contract No. DE-AC02-76-CH-03073.

[1] M. Bornatici *et al.*, Nucl. Fusion **23**, 1153 (1983).
[2] H. J. Hartfuss *et al.*, Plasma Phys. Controlled Fusion **39**, 1693 (1997).
[3] A. E. Costley *et al.*, Phys. Rev. Lett. **33**, 758 (1974).
[4] D. A. Gates *et al.*, Phys. Plasmas **5**, 1775 (1998).
[5] J. Spitzer *et al.*, Fusion Technol. **30**, 1337 (1996).
[6] J. Hosea, V. Arunasalam, and R. Cano, Phys. Rev. Lett. **39**, 408 (1977).
[7] G. Bekefi, *Radiation Processes in a Plasma* (Wiley, New York, 1966).
[8] T. H. Stix, *The Theory of Plasma Waves* (McGraw–Hill, New York, 1962).
[9] S. Bernabei *et al.*, Phys. Rev. Lett. **34**, 866 (1975).
[10] K. C. Wu, A. K. Ram, and A. Bers, Proc. Am. Phys. Soc. **41**, 1425 (1996).
[11] H. P. Laqua *et al.*, Phys. Rev. Lett. **78**, 3467 (1997).
[12] M. Ono *et al.*, Princeton Plasma Physics Lab Report No. 3225, 1997 (unpublished).