Diagnostics for liquid lithium experiments in CDX-U

R. Kaita,[a] P. Efthimion, D. Hoffman, B. Jones, H. Kugel, R. Majeski, T. Munsat, S. Raftopoulos, G. Taylor, and J. Timberlake
Princeton Plasma Physics Laboratory, Princeton, New Jersey 08543

V. Soukhanovskii, D. Stutman, M. Iovea, and M. Finkenthal
Johns Hopkins University, Baltimore, Maryland 21218

R. Doerner and S. Luckhardt
University of California at San Diego, La Jolla, California 92093-0354

R. Maingi
Oak Ridge National Laboratory, Oak Ridge, Tennessee 37830

R. Causey
Sandia National Laboratories, Albuquerque, New Mexico 87185-5800

(Presented on 21 June 2000)

A flowing liquid lithium first wall or divertor target could virtually eliminate the concerns with power density and erosion, tritium retention, and cooling associated with solid walls in fusion reactors. To investigate the interaction of a spherical torus plasma with liquid lithium limiters, large area divertor targets, and walls, discharges will be established in the Current Drive Experiment-Upgrade (CDX-U) where the plasma–wall interactions are dominated by liquid lithium surfaces. Among the unique CDX-U lithium diagnostics is a multilayer mirror (MLM) array, which will monitor the 13.5 nm LiIII line for core lithium concentrations. Additional spectroscopic diagnostics include a grazing incidence extreme ultraviolet (XUV) spectrometer (STRS) and a filterscope system to monitor D_α and various impurity lines local to the lithium limiter. Profile data will be obtained with a multichannel tangential bolometer and a multipoint Thomson scattering system configured to give enhanced edge resolution. Coupons on the inner wall of the CDX-U vacuum vessel will be used for surface analysis. A 10 000 frame per second fast visible camera and an IR camera will also be available. © *2001 American Institute of Physics.*
[DOI: 10.1063/1.1321007]

I. INTRODUCTION

Recent reactor studies[1] have identified liquid walls as a potentially ''revolutionary'' solution of generic magnetic fusion energy (MFE) first-wall problems, such as heat load and erosion limits of dry walls, neutron damage and activation, reliability/maintainability of first walls, and tritium inventory and breeding. A liquid metal wall in close proximity to the last closed flux surface may significantly enhance stability and performance by providing a surface that has low or no recycling. The benefits of such conditions have already been demonstrated during the ''Deposition of Lithium by Laser Outside of Plasma'' (DOLLOP) lithium wall conditioning experiments,[2] for example, in the tokamak fusion test reactor (TFTR).

Lithium offers an attractive synthesis of desirable liquid metal wall properties, but implementation of a liquid metal divertor or wall in large fusion devices requires tests on a smaller scale device. A first test of liquid metals at the National Spherical Torus Experiment (NSTX) scale is not likely, even though spherical tori (ST's) have an acute need for high heat load divertor and wall systems. As a necessary step, the CDX-U program has now been wholly dedicated to the testing of liquid metal limiter, divertor, and wall concepts.[3] A major feature of CDX-U which makes this practical is its diagnostic set, which is well suited to liquid lithium experiments. These systems are described in this article.

II. DESCRIPTION OF THE CDX-U FACILITY

The Current Drive Experiment-Upgrade (CDX-U) is a spherical torus facility[4] that has recently undergone an extensive program of upgrades which has resulted in an increase of the toroidal field to 2.3 kG. The new power supplies for the toroidal, vertical, and shaping fields (with the exception of the capacitor banks for the Ohmic heating solenoid) are preprogrammed and controlled by digital to analog waveform generators. The Ohmic heating system is capable of providing 125 to 150 kW to CDX-U. The plasma geometry remains substantially unchanged, with the basic discharge parameters summarized in Table I.

The CDX-U device also has a radio frequency (rf) heating system that has been upgraded to 250 kW at the fourth harmonic of the hydrogen ion cyclotron frequency. This will permit parallel and normal heat fluxes of 5–10 MW/m^2 and 1–3 MW/m^2, respectively, because of the compact ST geometry. Previously, increases in the central electron temperature

[a]Electronic mail: kaita@pppl.gov

 © 2001 American Institute of Physics

TABLE I. CDX-U parameters.

Major radius (R_0)	34 cm
Minor radius (a)	22 cm
Aspect ratio (R_0/a)	$\geqslant$1.5
Elongation (κ)	$\leqslant$1.6
Triangularity (δ)	$>$0.2
Toroidal field (B_t)	0.23 T
Ohmic current (I_p)	$\leqslant$80 kA
$P_{\text{auxiliary}}$ (radio frequency heating)	$\leqslant$250 kW

of up to 50% were observed in CDX-U, with 100 kW of rf power.[5] The new rf system extends the total heating capabilities to twice the Ohmic power input.

III. LIQUID LITHIUM EXPERIMENTS IN CDX-U

The first investigations on the interaction of a spherical torus (ST) plasma with liquid lithium will be performed using a toroidally local liquid lithium rail limiter (L3). This limiter consists of a heated 20 cm probe head, which can be inserted into the CDX-U plasma chamber (Fig. 1). The ''Plasma Interaction with Surface and Components Experimental Simulator'' (PISCES)[6] group at the University of California at San Diego (UCSD) has designed and built the probe head and drive mechanism, and the CDX-U group at PPPL has responsibility for the vacuum vessel interface.

In addition to providing a low-recycling limiter for CDX-U discharges, the L3 probe head exposures will permit the evaluation of effects that could not be investigated in the PISCES device. These include the dependence of lithium sputtering on ion angle of incidence, the importance of the magnetic sheath on redeposition, and the role of the ion energy distribution function on the loss rate of lithium from the sample.[7] It would also be easier to measure the recycling properties of hydrogen on a lithium surface with the liquid lithium rail limiter. We can use the D_α line emission from the L3 probe head in CDX-U as an indication of how much recycling is occurring there, whereas in PISCES the deuterium radiation is not localized to the sample.

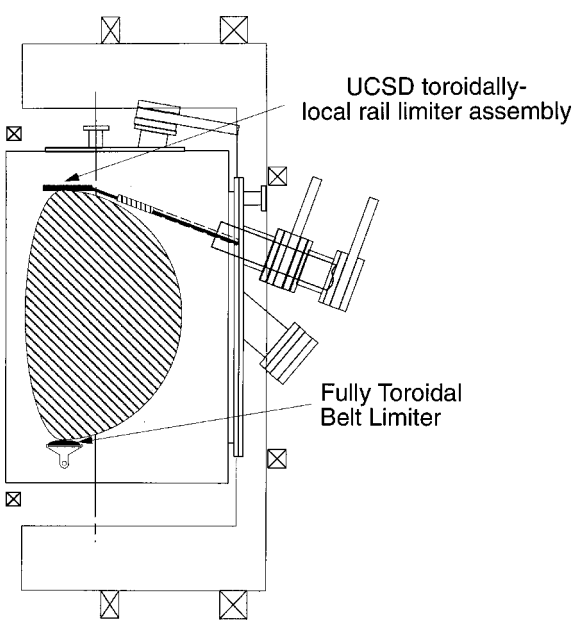

FIG. 1. Schematic of CDX-U showing positions of the liquid lithium rail limiter (L3) and the toroidal liquid lithium belt limiter.

In late 2000, CDX-U will operate with the large area, liquid lithium belt limiter. This is a fully toroidal limiter, and as shown in Fig. 1, it will be placed at the bottom of the vacuum vessel. The primary goal of these investigations will be to produce a ST discharge in which the plasma–wall interaction is dominated by a liquid lithium surface. The effects of operating with lithium walls will be quantified for the first time, greatly reducing the uncertainties of incorporating liquid lithium walls in larger toroidal devices such as Alcator C-Mod or NSTX.

IV. DIAGNOSTICS FOR LIQUID LITHIUM EXPERIMENTS

Diagnosis of the effects of a low-recycling limiter target on the CDX-U plasma will utilize the extensive set of CDX-U diagnostics. A simple means of monitoring the recycling is to observe the time evolution of the hydrogen or deuterium peak detected with the residual gas analyzer. This is also a way to estimate the formation of lithium hydride or lithium deuteride, since the dominant mechanism by which lithium absorbs hydrogen or deuterium is by the formation of these compounds.

A particular concern involves surface impurities that may require a temperature beyond the normal 181 °C melting point of lithium, to liquify the solid coatings they can form. This has been observed in previous lithium experiments.[2,8,9] The lithium temperature will be varied by heaters on the toroidal limiter container up to 500 °C to address this issue, and the influx of lithium as it evaporates needs to be monitored spectroscopically as a function of target temperature.

The most basic spectroscopic diagnostic on CDX-U is a monitor of the neutral lithium line emission at 670.8 nm. A filterscope system is being installed to monitor D_α and impurity lines local to lithium limiters. For the L3 experiments, it will use the port immediately below the limiter assembly shown in Fig. 1. Additional spectroscopic diagnostics include a Czerny-Terner 0.3 m monochromator, a far ultraviolet monochromator covering a spectral range from 130 to 250 nm, and a 1 m grazing incidence extreme ultraviolet spectrometer (STRS) which measures between 2 and 36 nm.

Deuterium fueling efficiency and lithium impurity accumulation will also be investigated with the spectroscopic diagnostics on CDX-U. A multilayer mirror (MLM) array[10] will observe the 13.5 nm LiIII line for core lithium concentrations. The MLM diagnostic contains an array of absolute extreme ultraviolet (XUV) diodes, and it provides impurity profiles through spatially resolved measurements of their brightness. The ten channels of this system are oriented to view across a poloidal cross section of the plasma. With mirrors chosen for measuring the 15 nm OVI emission, this diagnostic has already been used to observe impurity accumulation in CDX-U discharges.

There is also a ten-channel radiometer[10] located in the horizontal midplane of CDX-U for a tangential view of the plasma. It can operate either in bolometric mode with unfil-

tered absolute extreme ultraviolet (XUV) diodes for total radiated power profiles, or in a configuration that permits OVI or CV emissivity measurements with 250 nm beryllium or 300 nm titanium filters. Measurements of CDX-U discharges to date with this array show strong peaking in the radiation losses. These are discussed in more detail in Ref. 10.

A major new profile diagnostic is the multipoint Thomson scattering (TS) system.[11] It uses a 5 J ruby laser that passes twice through the plasma along a vertical chord. The scattered photons are collected in 12 channels that provide a spatial resolution of about 2.5 cm. Since the optical table is movable, two-dimensional scanning is possible to obtain almost 70% of the radial extent of the plasma. Since the TS measurements have difficulties with low signal levels near the plasma edge, they will be augmented in this region by profiles from a new eight-tip ''rake'' Langmuir probe.

The width of the toroidal belt limiter (Fig. 1) was minimized to reduce the lithium inventory and retain the coverage of the plasma with the TS diagnostic. This requires improved plasma position control, and a new computer system is being installed for this purpose. Analyses of CDX-U equilibria indicate that more flux loops are needed for both equilibrium reconstruction and plasma control, and they will be added when the machine is vented for the installation of the toroidal belt limiter later in 2000.

A fast visible camera, which obtains 10 000 frames per second, will be used to image the plasma through the tangential port shown in Fig. 2. Variations in the surface temperature of the lithium will be observed with an infrared camera. A zinc selenide window will be mounted on a port that has a view of the L3, and there will be a similar arrangement for the toroidal belt limiter.

A lithium acetylide micropellet injector provides further capability for testing lithium diagnostics and investigating lithium transport in CDX-U. The system uses the mechanism developed for the boron low velocity micropellet injector,[12] and is capable of delivering particles in the range of 100 to 1000 μ in diameter. The lithium acetylide is loaded into 16 barrels in a revolving turret, and it is propelled with deuterium at a pressure of 40 PSI. Injection occurs once per discharge, with the smaller particles arriving first at the plasma edge to dissociate, ionize, and be transported to the core.

V. NEW DIAGNOSTIC NEEDS AND CHALLENGES

The majority of diagnostics for the CDX-U liquid lithium experiments are typical to the study of MFE plasmas. At most, they may be tuned, but not otherwise modified, for specific measurements, such as the 13.5 nm LIII line for the MLM array.

Other parameters, however, are unique to the liquid lithium studies. Among the most prosaic, but nevertheless important, is the measurement of the current flowing in the belt limiter in the toroidal direction. This is conceptually similar to measuring eddy currents in structures surrounding MFE discharges. Schemes involving sensors on the lithium surface, on the other hand, are difficult to implement.

A simple solution is to divide the belt limiter into two semicircular halves. This results in two toroidal locations

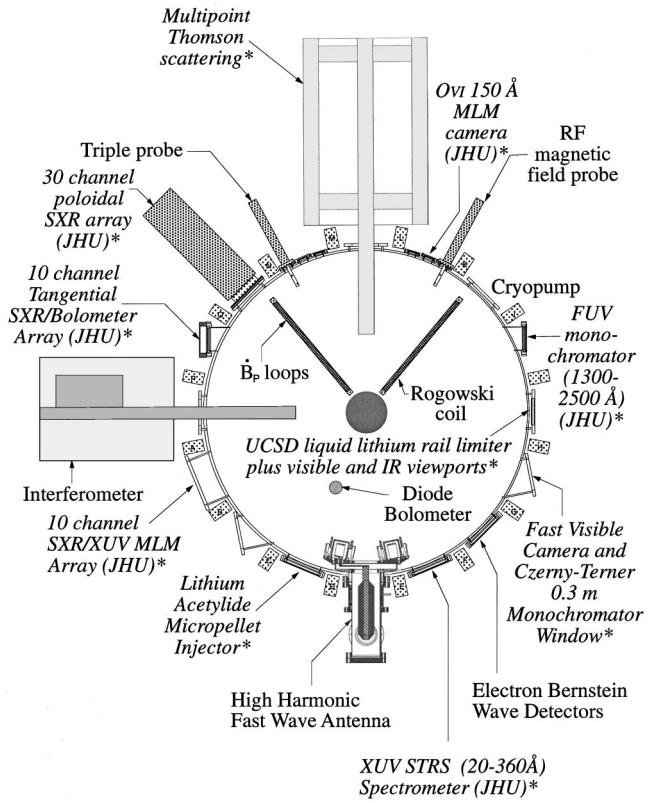

FIG. 2. Layout of diagnostics on CDX-U. Diagnostics particularly relevant to liquid lithium experiments are italicized.

where the plasma does not contact the lithium. The surface areas of these places are small compared to the remainder of the belt limiter, however, and their effect on the recycling should not be significant. By sending leads from each limiter half to outside the vacuum vessel, using electrically isolated feedthroughs, the toroidal current can be measured easily. In addition, such an arrangement provides the option of investigating the consequences of breaking the eddy current path through the belt limiter.

Since the plasma facing surface is a liquid, it is also important to know how it varies during a discharge. Simple estimates, based on the assumption that the belt limiter is a solid conductor, suggest that eddy currents can induce a vertical motion of as much as a centimeter during a typical CDX-U shot. Surface tension, however, can limit the displacement of the liquid lithium to much smaller values, and hence would be more difficult to detect.

One sensitive technique for accurate measurements of surfaces is coherent laser radar ranging, or CLR.[13] In this approach, the distance between the fixed position of a 1.5 μm laser source and the point to be monitored is determined from the shift in frequency of the linearly modulated light beam as it reflects off the target. Distances have been measured to a precision of less than 100 μm with CLR.

An issue is the time resolution achievable with CLR. Target displacement measurements in the 10 Hz range have been obtained with this method. This may not be adequate for monitoring the time evolution of the belt limiter surface, however, since 100 ms is an order of magnitude longer than

the duration of a typical CDX-U discharge. Further improvements in time resolution are thus desirable.

Once lithium experiments begin in CDX-U, it becomes important to determine how the vacuum vessel wall is affected. Coupons mounted on the vacuum side of the walls in fusion devices are an effective and economical means of determining the cumulative effects of the interactions of plasmas with surfaces exposed to them.[14] Such samples are typically removed at a time when the machine is vented for maintenance and upgrade activities. With experiments involving lithium, the inside of the vacuum vessel is expected to have a coating which must be ''passivated'' before such work can occur. This process, which involves exposure to air and the removal of the lithium compounds with a solvent, would clearly make any meaningful analysis of the coupons impossible.

A simple solution is to mount the coupons in an airtight enclosure behind a series of gate valves, so they can be removed without venting the vacuum vessel and exposure to atmosphere. This approach has been used successfully with the ''Divertor Material Evaluation Studies'' (DiMES) probe on DIII-D,[15] where the tip was removed from the machine and shipped for offsite analysis without significant degradation of its surface. Because the technique does not require bringing the entire machine up to air, it has the added advantage of enabling comparisons between coupon exposures of varying durations. Coupons positioned in this manner will be used during lithium experiments in CDX-U.

ACKNOWLEDGMENT

This work was supported by USDOE Contract No. DE-AC02-76-CHO3073.

[1] M. A. Abdou *et al.*, APEX Interim Report, UCLA-ENG-99-206/UCLA-FNT-107 (1999).
[2] D. K. Mansfield *et al.*, Phys. Plasmas **3**, 1892 (1996).
[3] R. Kaita *et al.*, in *Proceedings of the 18th IEEE/NPSS Symposium on Fusion Engineering* (1999), p. 127.
[4] J. Menard *et al.*, Phys. Plasmas **6**, 2002 (1999).
[5] D. Stutman, M. Finkenthal, V. Soukhanovskii, J. Menard, T. Munsat, R. Kaita, and R. Majeski, Plasma Phys. Controlled Fusion **41**, 867 (1999).
[6] Y. Hirooka *et al.*, J. Vac. Sci. Technol. A **8**, 1790 (1990).
[7] N. V. Antonov *et al.*, J. Nucl. Mater. **241–243**, 1190 (1997).
[8] H. W. Kugel, J. Gorman, D. Johnson, G. Labik, G. Lemunyan, D. Mansfield, J. Timberlake, and M. Vocaturo, in *Proceedings of the 17th IEEE/NPSS Symposium on Fusion Engineering*, San Diego, CA, 6–10 October 1997 (1998), p. 869.
[9] G. Labik, J. Bartolick, J. Gorman, D. Johnson, G. Lemunyan, D. Long, D. Mansfield, and M. Vocaturo, in *Proceedings of the 17th IEEE/NPSS Symposium on Fusion Engineering*, San Diego, CA, 6–10 October 1997 (1998), p. 873.
[10] V. Soukhanovskii *et al.*, Rev. Sci. Instrum. (these proceedings).
[11] T. Munsat and B. LeBlanc, Rev. Sci. Instrum. **70**, 755 (1999).
[12] H. Kugel, J. Gorman, R. Kaita, T. Munstat, and D. Stutman, Rev. Sci. Instrum. **70**, 493 (1999).
[13] H. W. Kugel, D. Loesser, A. L. Roquemore, M. M. Menon, and R. E. Barry, Rev. Sci. Instrum. (these proceedings).
[14] W. R. Wampler *et al.*, J. Vac. Sci. Technol. A **6**, 2111 (1988).
[15] J. N. Brooks, C. P. C. Wong, and D. G. Whyte, ''DiMES Divertor Erosion Experiments on DIII-D,'' SAND96-1281C (1996).