Line emission tomography for CDX-U using filtered diodes

D. Stutman, J. Menard, Y. S. Hwang, W. Choe, and M. Ono
Princeton Plasma Physics Laboratory, Princeton University, Princeton, New Jersey 08543

M. Finkenthal, V. Soukhanovskii, M. J. May, S. P. Regan, and H. W. Moos
Johns Hopkins University, Baltimore, Maryland 21218

(Presented on 16 May 1996)

Electron density and temperature in the CDX-U low aspect ratio tokamak are too low to allow observation of fast magnetohydrodynamic activity using soft x-ray continuum emission. However, spectroscopic measurements show that extreme ultraviolet (XUV) line emission of intrinsic impurities is bright enough to observe such activity. In addition, a fast monitoring system for local temperature changes in the plasma core is required for planned auxiliary heating experiments. We present a spectrally resolved tomographic system for fast imaging of O VI $2s-np$, $2p-nd$ ($n\geqslant 3$), C V $1s^2-1s2p$ and C VI $1s-2p$ XUV transitions. Using this emission, we can study both core and edge MHD activity, while the C VI to C V intensity ratio can indicate local changes in electron temperature. To achieve maximal throughput together with the needed spectral resolution, we use arrays of surface barrier diodes filtered with bandpass elemental filters. Using M edge filters (Zr, Pd, and Ag), we achieve both good discrimination between the above charge states and large transmission at the wavelengths of interest. Preliminary results obtained from CDX-U are presented.
© *1997 American Institute of Physics.* [S0034-6748(97)67401-8]

I. INTRODUCTION

Research on the CDX-U tokamak at Princeton Plasma Physics Laboratory (PPPL) investigates the physics and operational limits of low aspect ratio tokamak discharges.[1,2] Typical CDX-U parameters are: $R\approx 35$ cm, $a\approx 23$ cm, $\kappa\approx 1.5$, $B_{T0}\approx 1$ kG, $I_p\approx 60$–70 kA, and 12–16 ms duration (Fig. 1). Due mostly to low toroidal field, the plasma density and temperature are relatively low: $N_{e0}\approx 0.5$–$0.7\ 10^{13}$ cm^{-3}, $T_{e0}\approx 150$ eV with aluminum vessel, but is expected to rise to $T_{e0}\approx 200$ eV with a stainless vacuum vessel upgrade, and up to $T_{e0}\approx 400$ eV with planned fast wave auxiliary heating.

At the above plasma temperatures and densities, the soft x-ray continuum emission is too weak to enable measurement of magnetohydrodynamic (MHD) activity with good spatial and temporal resolution; especially away from the plasma core. However, both our computations and measurements show that extreme ultraviolet (XUV) resonance line emission of intrinsic impurity ions is bright enough to permit observation of MHD fluctuations. Therefore, by simultaneously recording line emission from several charge states along many chords, MHD activity from core to the edge can be investigated using conventional tomographic techniques. In addition, such a system can be used to monitor auxiliary power deposition, based on changes in position and width of the impurity ion emission shells.

Of special usefulness for CDX-U would be to obtain emissivity contours for O VI, C V, and C VI ions. High resolution spectroscopy indicates that although molybdenum limiters are used, C and O are the most abundant CDX-U impurities, with their $2s-np$, $2p-nd$ ($n\geqslant 3$), $1s^2-1s2p$ and $1s-2p$ transitions, respectively, largely dominating the XUV spectrum. In addition, both experiment[3] and computations show that in the above temperature range C V and C VI ions sample most of the plasma volume. This is exemplified in Fig. 2, which presents their radial emissivity distributions computed using MIST[4] and assuming $T_{e0}=200$ and 400 eV, $N_{e0}=10^{13}$ cm^{-3}, $n_C(r)=0.025\ N_e(r)$, $a=25$ cm, and anomalous diffusive radial transport with $D=4000$ cm^2/s.

The present work describes a dual line emission tomography system for CDX-U, using surface barrier diodes (SBDs) and M edge absorption filters to discriminate between the $1s^2-1s2p$ and $1s-2p$ C transitions at 33.7 and 40.5 Å. Because of its limited energy resolution, the system is meant primarily for MHD studies. Interestingly, recent preliminary results indicate that signal spectral purity might be good enough to estimate impurity transport levels.

II. C V/C VI FILTERED DIODE ARRAYS

Tomographic reconstruction of energy-integrated soft x-ray emissivity is a well established diagnostic technique in tokamaks. In several soft x-ray imaging experiments, emission from different charge states of injected or intrinsic impurity ions has been discriminated using K or L edge absorption filters.[5,6] In a companion article, we show that by using synthetic multilayer mirrors as dispersive elements and photodiodes as detectors, it is possible to build tomographic arrays for the 33.7 and 40.5 Å C transitions having ≈ 1 Å spectral resolution.[7]

However, in order to obtain the large photon flux required for measurement of fast MHD activity from the low density CDX-U plasma, one has to trade-off spectral resolution for throughput and use filtered photodiodes directly viewing the plasma. Spectral resolution of a channel is then limited by the typical absorption filter bandpass of a few tens of Å, and the contributions of adjacent impurity lines must be either substracted using a matrix of filter/detector channels, or suppressed. Since the dominant impurities in CDX-U are O and C, of main concern are the relatively strong O VII and O VIII resonance transitions at 21.6 and 19 Å, respec-

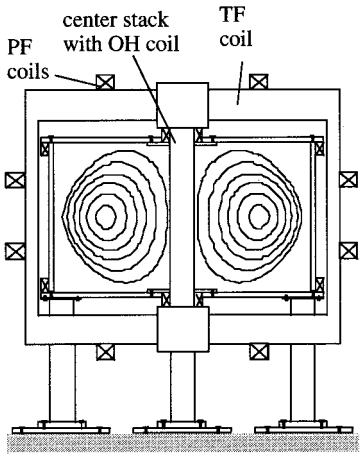

FIG. 1. Schematic of CDX-U low aspect ratio tokamak.

tively, as well as the very intense O VI transitions above ≈120 Å (see Fig. 3).

Carbon and oxygen He- and H-like $1s-2p$ line emission has been previously separated using K and L absorption edges of F, Ti, Fe, and Cr filters and detected with SBDs.[6] However, using such filters discrimination between O and C lines is not very effective, and simultaneous measurements of all four lines shown in Fig. 3 is needed even if one desires to measure only the C emission. Also, the transmission of these filters at the C V and C VI wavelengths is quite low (<4%).

Here we show that by using the M absorption edge of Ag and Pd filters instead, one can effectively suppress the short and long wavelength oxygen emission, and simultaneously obtain large transmission at the C wavelengths while efficiently discriminating between the He-like and H-like C lines; therefore, only two simultaneous measurements are needed to unfold the C V and C VI contributions. The discrimination properties of such filters are illustrated in Fig. 3, where the transmission of 2.5 kÅ Ag and Pd foils is plotted versus wavelength (the curves include also a 200 Å gold layer on the SBD used for detection).[8] As seen in Fig. 3, the

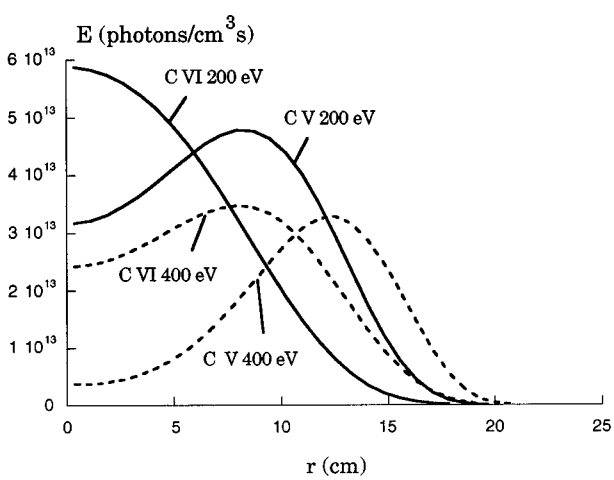

FIG. 2. C V $1s^2-1s2p$ and C VI $1s-2p$ emissivity profiles computed using MIST.

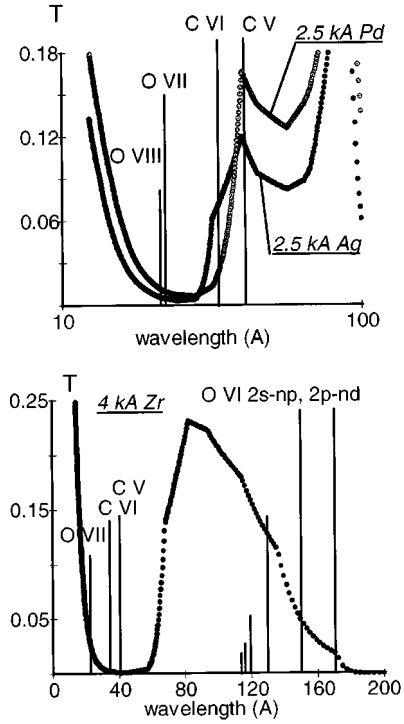

FIG. 3. Transmission of M-edge filters used to separate O VI, C V, and C VI emission.

Ag filter transmits well both C V and C VI transitions, while the Pd filter transmits mainly the C V line at 40.5 Å, having a rejection factor of ≈8 for the C VI line at 33.7 Å. In addition, both filters offer strong attenuation for O VII and O VIII resonance transitions around 21.6 and 19 Å, and very good rejection for λ>100 Å.

To observe O VI emission from the plasma edge we find Zr filters effective. As illustrated also in Fig. 3, Zr has good transmission in the 120–160 Å band where intense $2s-np$, $2p-nd$ O VI transitions lie, while attenuating the shorter wavelength transitions of C and O.

A central problem with this low resolution system is to assess the spectral purity of the signal. For example, with installation of stainless steel vessel in CDX-U, Fe lines around 90 Å might slightly contaminate the C signal. A simple way to estimate the level of contamination is to place thin, carbon containing filters in front of the bandpass Ag and Pd filters. A 1 μm parylene-N filter for example, will attenuate the C V and C VI signals by about two orders of magnitude, while transmitting most of the radiation in the 44–95 Å range.

The layout of a filtered diode C V/C VI tomography array is presented in Fig. 4. Detectors are 0.8 cm diam SBDs manufactured by Ortec and have 200 Å gold contacts. The array consists of two columns of 18 filter/diode channels, having 2.5 cm interchannel spacing. Spatial resolution of ≈2 cm at the plasma midplane is achieved using collimators of ≈20 cm length and 0.8 cm width positioned ≈5 cm behind the limiter radius. The flat walled CDX-U vacuum vessel permits having parallel lines of sight, which is advantageous for tomographic reconstruction. Since slight beam divergence is not an issue for this system, to maximize throughput

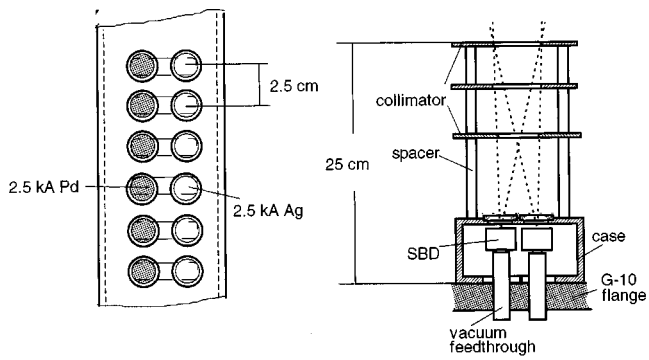

FIG. 4. Front and cross sectional view of the filtered diode array.

we use entrance slits elongated in the toroidal direction. Such evanescent collimators are simply realized using several plates having slots of increasing length, and stacked at intervals chosen in such a way as to eliminate crosstalk between channels.

An interesting option for a filtered diode system would be to use glass capillary arrays for collimation; this would enable designing extremely compact arrays of $\approx 2.5\times 2.5$ cm cross section. (Although using capillary arrays may degrade collimation by multiple reflections, it is easy to show that for $\lambda < 50$ Å decollimation is insignificant for channel aspect ratio >0.02.) Throughput with capillary arrays is however lower, and for the CDX-U device we therefore prefer the conventional collimator.

Using the emissivity data in Fig. 2, the expected diode currents are in the range from several tens to several hundred nA, requiring a transimpedance gain 10^7 V/A for recovery. To achieve this gain together with good bandwidth and signal-to-noise ratio, we use the simple ac coupled preamplifier depicted in Fig. 5. Peak-to-peak noise level is about 1.5 nA for a bandwidth of $\approx$80 kHz. Following this preamplifier with a differential CAMAC conditioning amplifier, the level of pick up during CDX-U discharges is comparable to the electronic noise level.

Relative calibration of the diode/filter combinations is performed using a dual beam soft x-ray calibration source operated at C K_α wavelength. By using in the reference beam an absolute XUV-100 diode (UDT manufacturer), any uncertainties arising from an imperfectly known calibration spectrum and different spectral responses of the reference and measured detectors are eliminated, and better then 1% accuracy in relative calibration is possible.

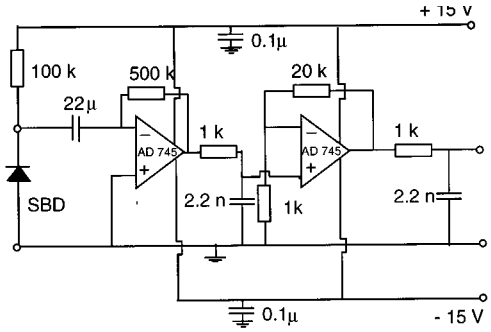

FIG. 5. Low noise, high gain, and bandwidth preamplifier used with filtered SBDs.

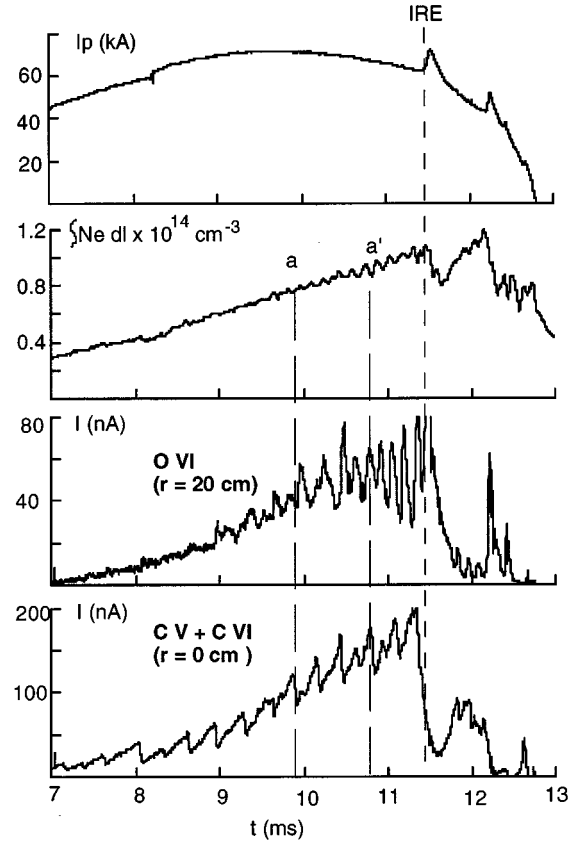

FIG. 6. Emission of C V and C VI from CDX-U core and edge emission of O VI obtained using collimated surface barrier diodes filtered with 2.5 kÅ Ag and 4 kÅ Zr, respectively.

III. PRELIMINARY RESULTS FROM CDX-U

Prior to array construction, we tested the possibility of using M edge absorption filters to isolate C V, C VI, and O VI emission, using two filtered and collimated photodiodes viewing the CDX-U plasma along its major radius at the midplane, and 20 cm above it; the edge line-of-sight does not cross the bulk plasma. A double filter wheel in front of the midplane diode (a 0.5 cm^2 area Ortec diode of the type used for the arrays) enables various combinations of filters to be placed in the beam line. The diode viewing the edge plasma is a 1 cm^2 active area XUV-100 diode, and it is filtered with a fixed 4 kÅ Zr foil for O VI emission.

Figure 6 presents traces of the diode signals and of the plasma current and density. As seen, when filtered with 2.5 kÅ Ag the midplane diode clearly shows sawtoothing activity from the plasma core. To establish this is indeed C V and C VI emission, we placed in front of the Ag filter an additional parylene-N foil, 1-μm-thick. The signal decreased practically to the noise level, indicating that very good discrimination of C emission is obtained. The labeling of the edge signal as O VI emission is based on measurements performed using a multilayer mirror device,[7] as well as on MIST computations, which indicate that in CDX-U conditions the O VI shell should peak around $r \approx 20$ cm.

The comparison of the C V, C VI signals from the core and the O VI signals from the edge, reveals many other interesting features. One notices for example, that before the plasma current peak the edge is relatively quiet, despite quite pronounced sawtoothing. Density signal is also smooth, indicating the oscillations in C emission are an almost pure core temperature effect. Closer to the current peak inverted sawtoothing behavior becomes apparent at the edge. Using sawtooth period scaling from Ref. 9 and full neoclassical corrections for plasma resistivity, we calculate that the observed sawtooth period in CDX-U is consistent with a large inversion radius, $r_s \approx 7$–9 cm, in good agreement with results of magnetic reconstruction of flux surfaces.

After the current peak, one observes a higher frequency mode starting to grow at the edge. (magnetic data indicates this is most likely a $n=1/m=2$ mode). As this mode grows, it seems to couple with the $n=1/m=1$ sawtooth oscillation, amplifying it, and apparently leading to an internal reconnection event (IRE) at about 11.5 ms. The IRE is thought to be a global MHD reconnection event that was first observed in the START tokamak.[10] At its occurrence, the current profile relaxes and the internal inductance drops, causing a sudden elongation of the plasma and, in the CDX-U, a strong interaction with top and bottom limiters. As apparent from the O VI and density signals, this causes a significant loss of plasma at the edge. One notes however, that the core is much more resilient: while O VI signal decays without recovering, the core signals partially recover, synchronous with the recovery in the density signal. We attribute this recovery to particles and energy still being confined in the core, since an influx of particles from the walls as the cause of recovery would have first produced an increase in O signals. This observation is consistent the relatively benign effects of IRE in low aspect ratio machines thus far, compared with the more violent disruptions in larger aspect ratio machines.

IV. SUMMARY

We use strong XUV resonance lines of intrinsic impurity ions instead of soft x-ray continuum emission for observation of fast MHD phenomena because of the relatively low density and temperature of CDX-U plasma. To investigate MHD activity and rf power deposition using tomographic techniques, we develop arrays of diodes equipped with M edge filters, which can discriminate between emission from Li-, He-, and H-like charge states of O and C. Preliminary results obtained from CDX-U using such detection channels show that rich physical information can be obtained using this approach.

ACKNOWLEDGMENTS

The authors gratefully acknowledge Dr. K. Hill who kindly provided the surface barrier diodes for the CDX-U arrays. This work is supported by DoE Contract No. DE-AC02-76-CHO-3073 at PPPL and DoE Grant No. DE-FG02-86ER52314AT at Johns Hopkins University.

[1] J. Menard *et al.*, in Proceedings of the 11th topical Conference on rf Power in Plasmas, Palm Springs, CA, 1995, edited by R. Prater and V. S. Chan, p. 59.
[2] Y. S. Hwang *et al.*, in *Proceedings of the 22nd EPS Conference on Controlled Fusion and Plasma Physics, Bournemouth* (EPS, Bournemouth, 1995), Vol. II, p. 93.
[3] S. P. Regan *et al.*, Rev. Sci. Instrum. **66**, 770 (1995).
[4] R. A. Hulse, Nucl. Technol. Fusion **3**, 259 (1983).
[5] K. W. Wenzel and R. D. Petrasso, Rev. Sci. Instrum. **61**, 693 (1990).
[6] S. Hokin *et al.*, Rev. Sci. Instrum. **63**, 5037 (1992).
[7] D. Stutman *et al.*, Rev. Sci. Instrum., these proceedings.
[8] B. L. Henke *et al.*, At. Data Nucl. Data Tables **54**, 205 (1993).
[9] K. McGuire and D. C. Robinson, Nucl. Fusion **19**, 505 (1979).
[10] A. Sykes *et al.*, Plasma Phys. Control. Fusion **35**, 1051 (1993).