Coupled IPS/NIMROD/ GENRAY simulations

Thomas G. Jenkins, Tech-X Corporation

in collaboration with

Scott Kruger
Tech-X Corporation

Eric Held
Utah State University

R. W. Harvey
CompX

Dalton Schnack
University of Wisconsin-Madison

The SWIM project team
http://cswim.org

SciDAC
Scientific Discovery through Advanced Computing

Fall 2010 CEMM Meeting
7 November 2010 Chicago, IL

Problem: modeling mitigation/control of tearing modes (magnetic islands) by electron cyclotron current drive

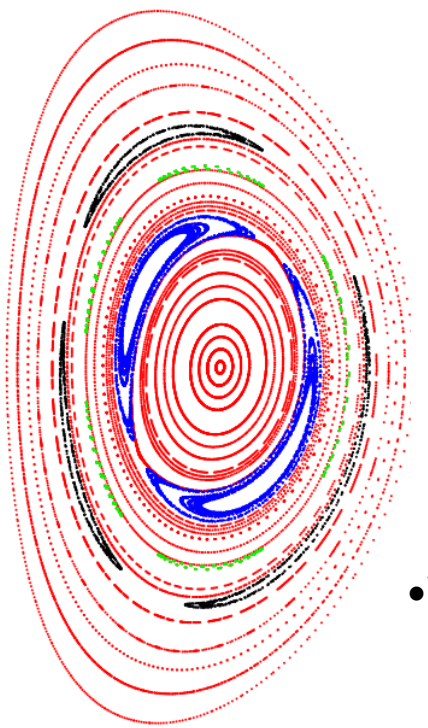

- Neoclassical (or resistive) tearing modes generate magnetic islands in tokamaks. Experimentally, RF waves resonant with electron cyclotron motion can drive currents that alter/suppress the island structure. We want to model this process.

- RF effects enter the kinetic equation as a quasilinear operator:

$$\frac{\partial f_\alpha}{\partial t} + \mathbf{v}\cdot\nabla f_\alpha + \frac{q_\alpha}{m_\alpha}(\mathbf{E}+\mathbf{v}\times\mathbf{B})\cdot\frac{\partial f_\alpha}{\partial \mathbf{v}} = C(f_\alpha) + Q(f_\alpha)$$

- Velocity moments of $Q(f_\alpha)$ modify the MHD equations, and appear in closure calculations for $\boldsymbol{q}$ and $\boldsymbol{\Pi}$. We want to construct $Q(f_\alpha)$ in NIMROD using data from GENRAY.

$$\mathbf{E}+\mathbf{u}\times\mathbf{B} = \eta\mathbf{J} + \frac{\mathbf{F}^{rf}_{e0}}{n|q_e|}$$

$$\rho\frac{\partial \mathbf{u}}{\partial t} + \rho(\mathbf{u}\cdot\nabla)\mathbf{u} = -\nabla p + \mathbf{J}\times\mathbf{B} - \nabla\cdot\boldsymbol{\Pi} + \sum_\alpha \mathbf{F}^{rf}_{\alpha 0}$$

$$\frac{3}{2}n\left(\frac{\partial T}{\partial t} + (\mathbf{u}\cdot\nabla)T\right) + p\nabla\cdot\mathbf{u} = -\nabla\cdot\mathbf{q} - \boldsymbol{\Pi}:\nabla\mathbf{u} + Q + \sum_\alpha S^{rf}_{\alpha 0}$$

$$S^{rf}_{\alpha 0} \equiv \int \frac{1}{2} m_\alpha v^2 Q(f_\alpha)\, d\mathbf{v}$$

$$\mathbf{F}^{rf}_{\alpha 0} \equiv \int m_\alpha \mathbf{v} Q(f_\alpha)\, d\mathbf{v}$$

How do we construct the $Q(f_\alpha)$ term?

General idea:

$$f_\alpha = f_{\alpha MHD} + \epsilon f_{\alpha RF}$$

$$\mathbf{E} = \mathbf{E}_{MHD} + \epsilon \mathbf{E}_{RF}$$

$$\mathbf{B} = \mathbf{B}_{MHD} + \epsilon \mathbf{B}_{RF}$$

where ε denotes the presence of RF phenomena. The RF distribution functions may be relativistic, so we need a momentum formulation, rather than a velocity formulation, of the derivation of NIMROD equations. Minor complication.

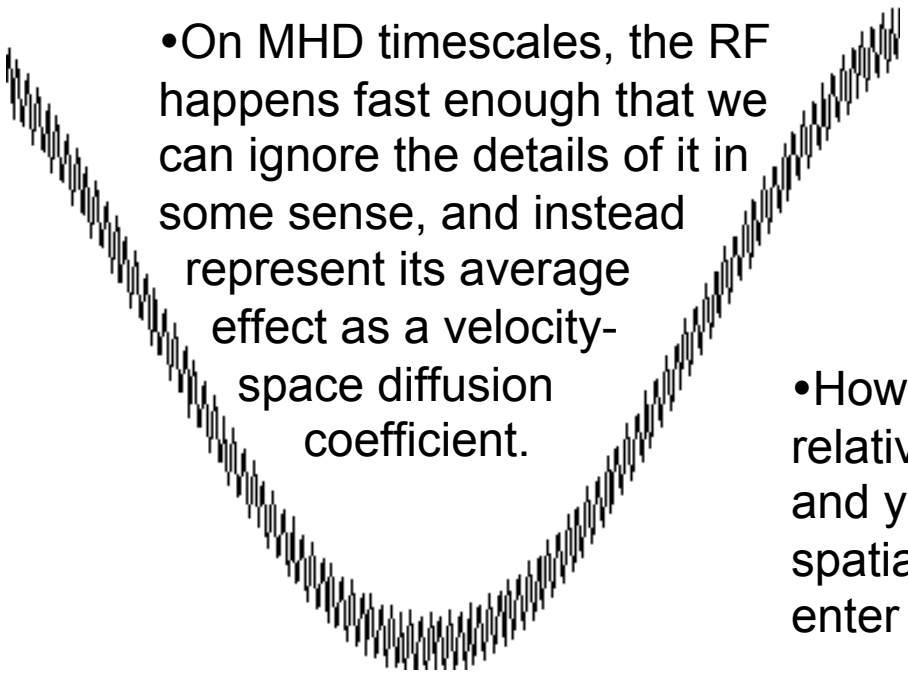

•On MHD timescales, the RF happens fast enough that we can ignore the details of it in some sense, and instead represent its average effect as a velocity-space diffusion coefficient.

•On RF timescales, MHD quantities are effectively "constant" in time and in space.

•However, fast, short-wavelength (possibly relativistic) RF quantities may beat together and yield physical effects on MHD time and spatial scales – thus, order ε^0 and ε^2 terms enter on the same footing.

The quasilinear operator arises from a product of highly localized RF quantities

- Order ε^0 (and ε^2, since RF terms beat together):

$$\frac{\partial f_{\alpha MHD}}{\partial t}+\frac{\mathbf{p}}{m_\alpha\gamma}\cdot\frac{\partial f_{\alpha MHD}}{\partial \mathbf{x}}+q_\alpha[\mathbf{E}_{MHD}+\frac{\mathbf{p}}{m_\alpha\gamma}\times\mathbf{B}_{MHD}]\cdot\frac{\partial f_{\alpha MHD}}{\partial \mathbf{p}}$$

$$+\epsilon^2 q_\alpha[\mathbf{E}_{RF}+\frac{\mathbf{p}}{m_\alpha\gamma}\times\mathbf{B}_{RF}]\cdot\frac{\partial f_{\alpha RF}}{\partial \mathbf{p}}=C(f_{\alpha MHD})$$

(will become $Q(f_\alpha)$ operator)

RF coupling enters only through the kinetic equation; Maxwell equations are unaffected

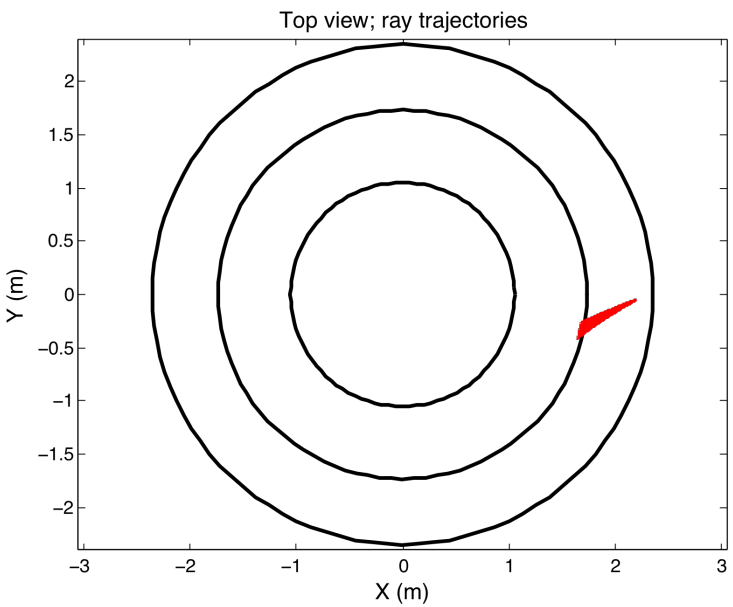

Sample GENRAY trajectories – power deposition is even more localized (not all points along the rays contribute)

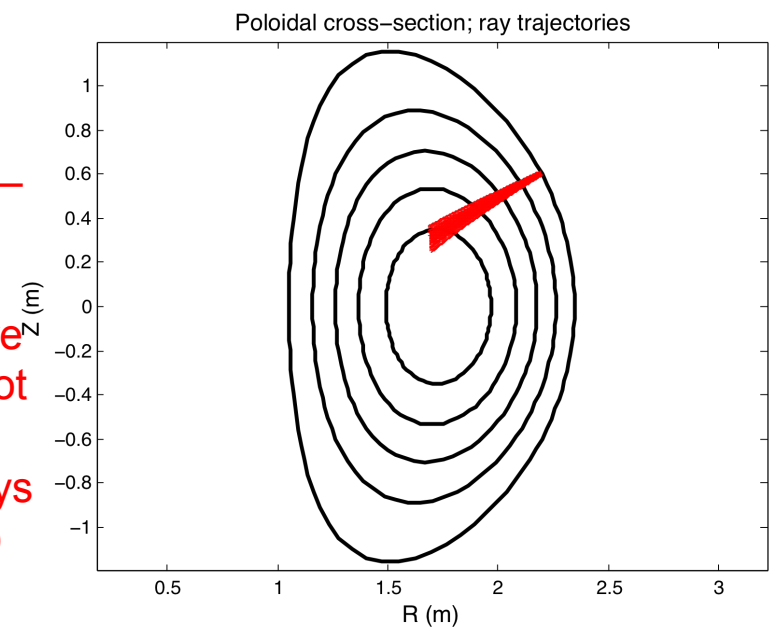

The form of the RF terms is rather complicated

Approximate ε^1 solution:

$$\frac{\mathbf{k}\times\mathbf{E}_{RF}(\mathbf{k})}{\omega(\mathbf{k})+i\Gamma(\mathbf{k})}=\mathbf{B}_{RF}(\mathbf{k})$$

New basis vectors

$$\hat{b}\equiv\frac{\mathbf{B}_{MHD}(\mathbf{x},t)}{|\mathbf{B}_{MHD}(\mathbf{x},t)|}$$

$$\mathbf{k}\cdot\hat{b}=k_{\|}(\mathbf{x},t)$$

$$\mathbf{k}-k_{\|}\hat{b}\equiv\mathbf{k}_{\perp}(\mathbf{x},t)$$

$$\hat{\xi}(\mathbf{x},t)=\hat{b}\times\hat{k}_{\perp}$$

$$\hat{k}_{\perp}(\mathbf{x},t)\equiv\frac{\mathbf{k}_{\perp}(\mathbf{x},t)}{|\mathbf{k}_{\perp}(\mathbf{x},t)|}$$

$$\mathbf{p}=p_{\|}\hat{b}+p_{\perp}\cos\phi\hat{k}_{\perp}+p_{\perp}\sin\phi\hat{\xi}$$

$$\mathbf{k}=k_{\|}\hat{b}+k_{\perp}\hat{k}_{\perp}$$

$$\mathbf{U}_{\alpha}=U_{\alpha\|}\hat{b}+U_{0\alpha\perp}\cos\lambda\hat{k}_{\perp}+U_{\alpha\perp}\sin\lambda\hat{\xi}$$

$$\begin{aligned}
f_{\alpha RF}(\mathbf{k},p_{\perp},p_{\|},\phi)=&-\frac{in_{0\alpha}q_{\alpha}}{(m_{\alpha}T_{\alpha})^{5/2}(2\pi)^{3/2}}\exp\left(-\frac{(p_{\|}-m_{\alpha}U_{\|\alpha})^2}{2m_{\alpha}T_{\alpha}}\right)\\
&\exp\left(-\frac{p_{\perp}^2}{2m_{\alpha}T_{\alpha}}\right)\exp\left(-\frac{m_{\alpha}U_{\perp\alpha}^2}{2T_{\alpha}}\right)\sum_{r=-\infty}^{\infty}\sum_{n=-\infty}^{\infty}\sum_{j=-\infty}^{\infty}I_r\left(\frac{p_{\perp}U_{\perp\alpha}}{T_{\alpha}}\right)\\
&J_j\left(\frac{k_{\perp}p_{\perp}}{m_{\alpha}\gamma\Omega_{\alpha}}\right)\frac{e^{i(j-n-r)\phi}e^{-ir\lambda}}{[\omega+i\Gamma-\frac{k_{\|}p_{\|}}{m_{\alpha}\gamma}-(n-r)\Omega_{\alpha}]}\left[E_{RF}^{\|}J_n\left(\frac{k_{\perp}p_{\perp}}{m_{\alpha}\gamma\Omega_{\alpha}}\right)\cdot\right.\\
&\left(\frac{m_{\alpha}U_{\|\alpha}}{\omega+i\Gamma}[\omega+i\Gamma-\frac{k_{\|}p_{\|}}{m_{\alpha}\gamma}-n\Omega_{\alpha}]-p_{\|}\left(1-\frac{\mathbf{k}\cdot\mathbf{U}_{\alpha}}{\gamma(\omega+i\Gamma)}\right)\right)\\
&+E_{RF}^{+}\left(\frac{e^{-i\lambda}m_{\alpha}U_{\perp\alpha}}{(\omega+i\Gamma)}J_n\left(\frac{k_{\perp}p_{\perp}}{m_{\alpha}\gamma\Omega_{\alpha}}\right)[\omega+i\Gamma-\frac{k_{\|}p_{\|}}{m_{\alpha}\gamma}-n\Omega_{\alpha}]-\right.\\
&\left.p_{\perp}J_{n-1}\left(\frac{k_{\perp}p_{\perp}}{m_{\alpha}\gamma\Omega_{\alpha}}\right)\left(1-\frac{\mathbf{k}\cdot\mathbf{U}_{\alpha}}{\gamma(\omega+i\Gamma)}\right)\right)\\
&+E_{RF}^{-}\left(\frac{e^{i\lambda}m_{\alpha}U_{\perp\alpha}}{(\omega+i\Gamma)}J_n\left(\frac{k_{\perp}p_{\perp}}{m_{\alpha}\gamma\Omega_{\alpha}}\right)[\omega+i\Gamma-\frac{k_{\|}p_{\|}}{m_{\alpha}\gamma}-n\Omega_{\alpha}]-\right.\\
&\left.\left.p_{\perp}J_{n+1}\left(\frac{k_{\perp}p_{\perp}}{m_{\alpha}\gamma\Omega_{\alpha}}\right)\left(1-\frac{\mathbf{k}\cdot\mathbf{U}_{\alpha}}{\gamma(\omega+i\Gamma)}\right)\right)\right]
\end{aligned}$$

- RF terms are complicated; most variables (**k**, n_α, $\mathbf{U}_\alpha$, T_α, Ω_α, **E**) also have spatiotemporal variation on MHD scales.
- Nevertheless, RF quantities combine to yield a local dispersion relation for linear waves (GENRAY)
- Analytical expressions possible in the nonrelativistic, small-**U** limit.

Using analytical solutions in NIMROD's fluid equations, initial code coupling has been completed

•Though the general form of the RF terms is complicated, the momentum integrals can be done analytically in certain limits. With these simplifying assumptions (low flow speeds, nonrelativistic, etc.) GENRAY data has been used to construct quasi-linear diffusion coefficients in NIMROD.

•The localized deposition appears to be physically reasonable (spatial localization, approximate order of magnitude, etc.

•How do we test the accuracy of the quasilinear terms?

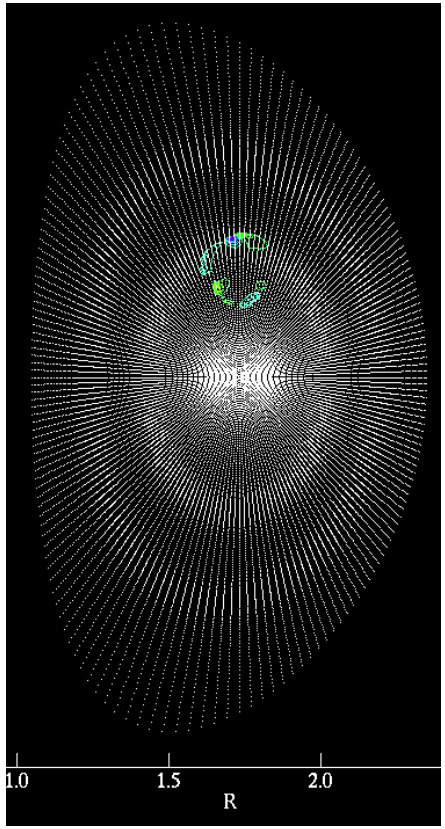

NIMROD data [deposition on X-Z half-plane (X>0) at Y=0]

Poloidal cross-section

Overhead view of tokamak

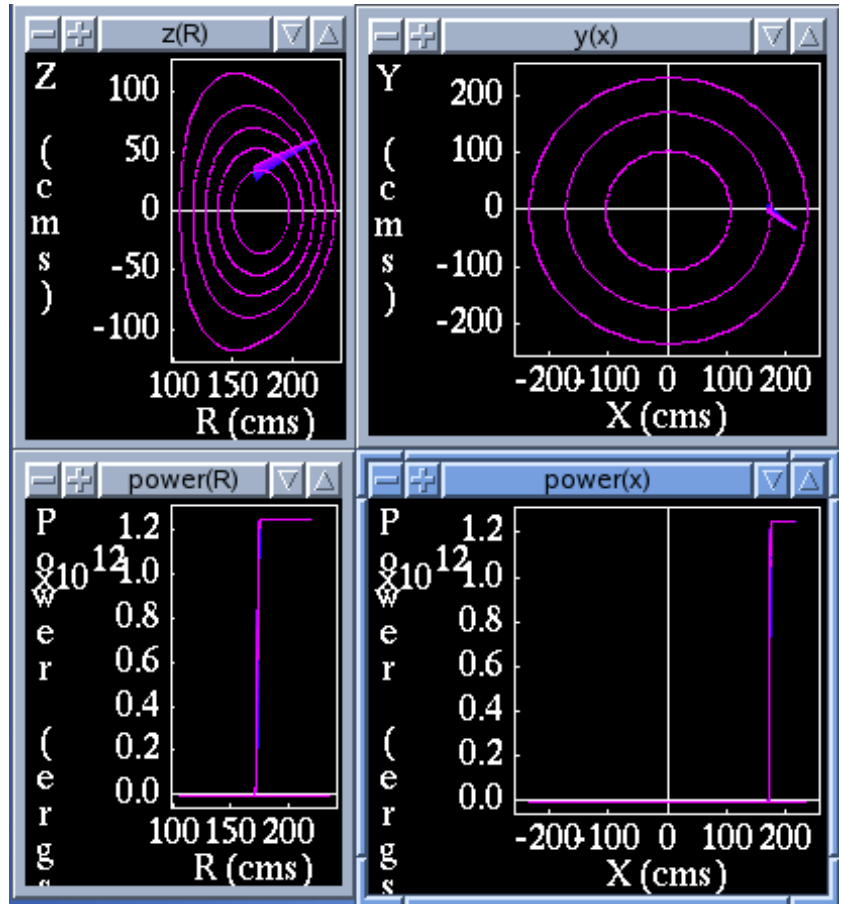

GENRAY data

Existing Fokker-Planck codes, which capture this physics in an average sense, can serve as a useful benchmark

•Current from a localized source is filamentary on the flux surface; current filaments influence local rational surface position (and mode response) – see Jenkins *et al.*, Phys. Plasmas **17**, 012502 (2010).

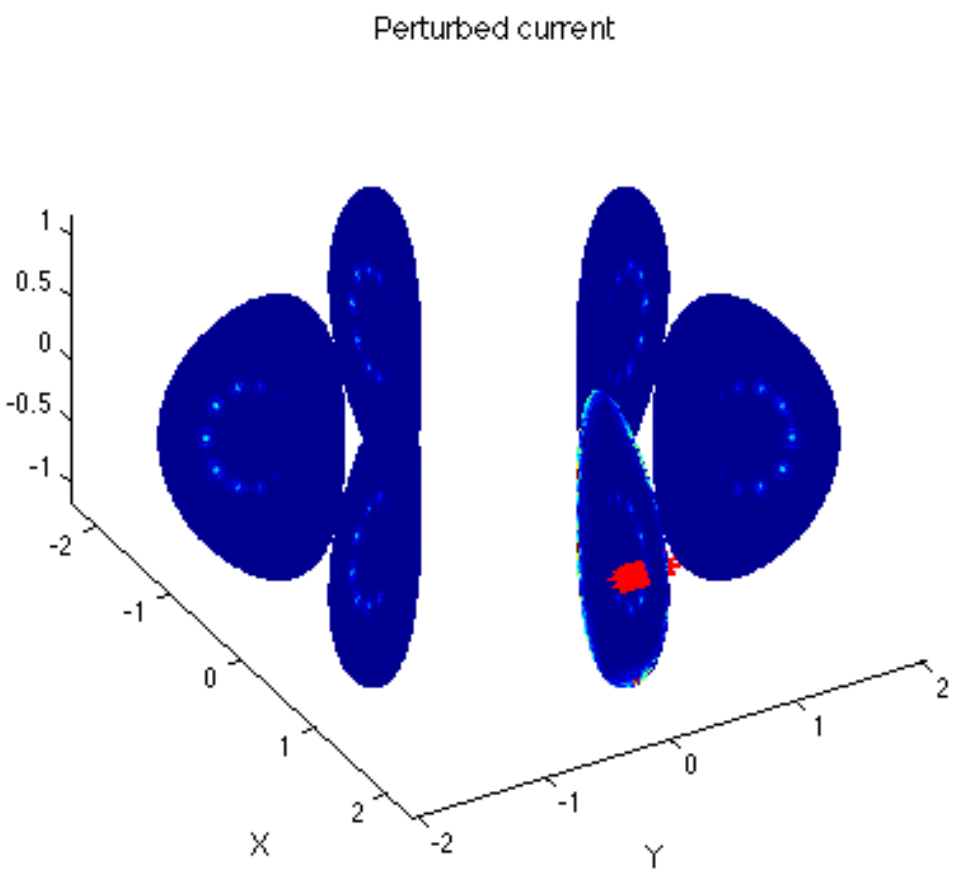

•Essentially, need an un-bounce-averaged, un-toroidal-averaged FP solution to capture full physics.

•Toroidal and flux-surface averages over NIMROD data can be compared with results from existing FP solvers.

•Of interest – unwind toroidally averaged result (from, e.g., CQL3D) into localized NIMROD deposition? Still under discussion.

Not all data along RF ray trajectories can be used

•Because of NIMROD's discrete Fourier representation in the toroidal direction, the number of discrete poloidal "slices" on which GENRAY data can be accumulated is limited and corresponds to the number of modes (2^{lphi}).

Tokamak, nearly from vertical, 32 modes (before dealiasing)

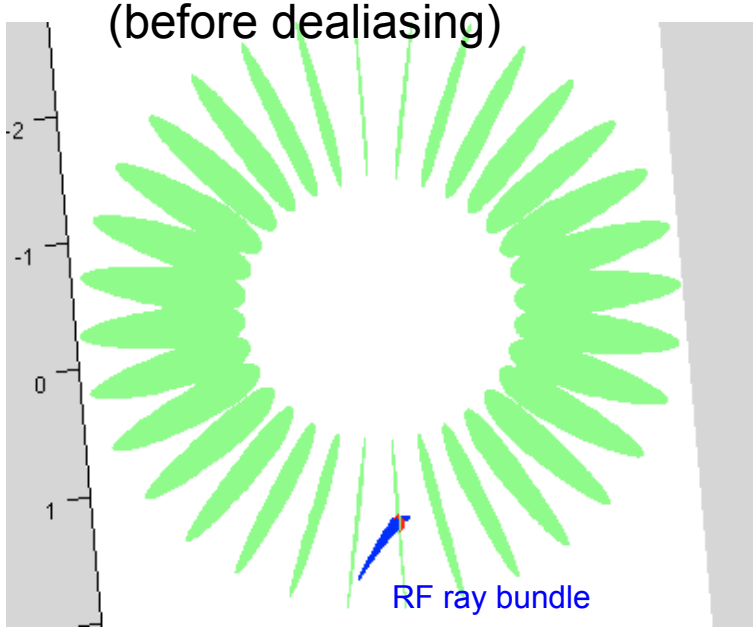

Power deposition (and thus, RF diffusion coefficients) even more highly localized than the rays.

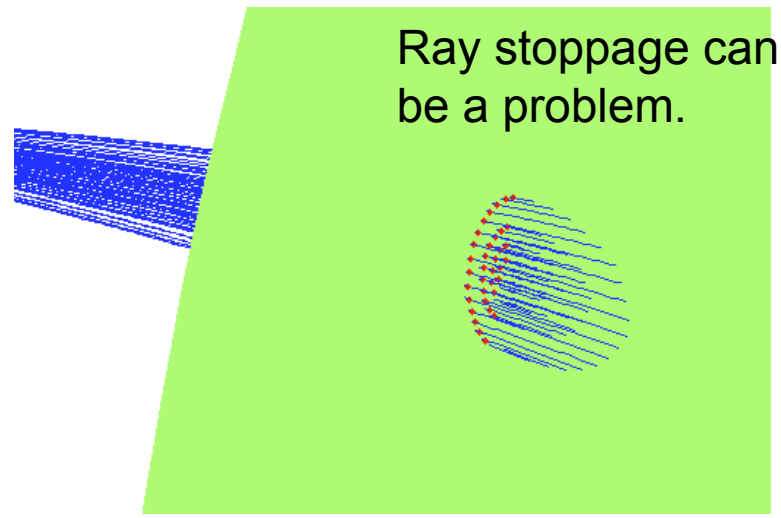

•Data can only be collected at points where rays cross the planes – many modes (~nprocs) required for good resolution. Do we conserve energy? Discrete data projected onto NIMROD basis functions via Shepard's algorithm.

NDFT's?

IPS interfacing - schematic

- NIMROD runs continuously with periodic GENRAY updates

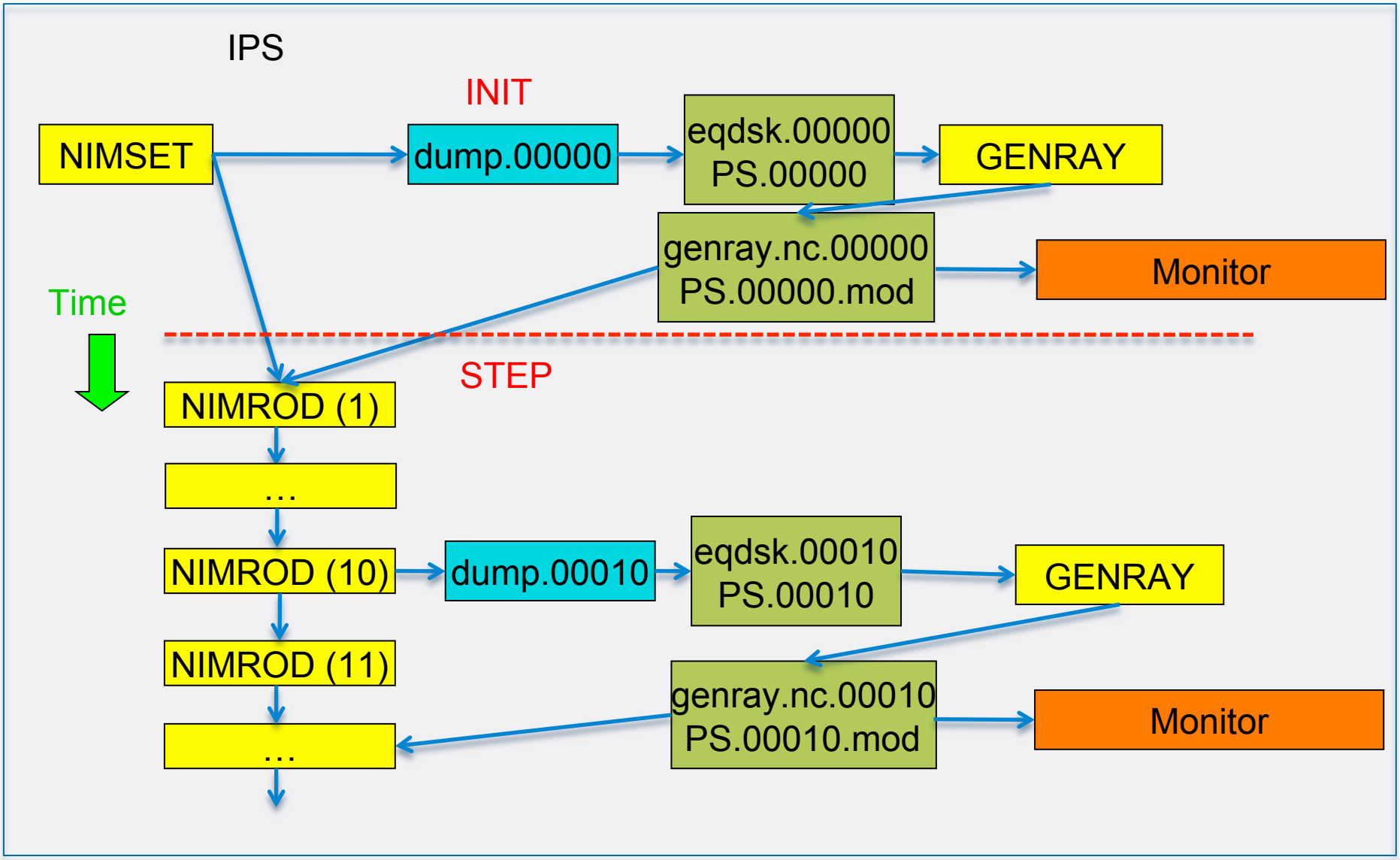

IPS simulation status can be monitored in realtime via a web portal

http://swim.gat.com:8080/

Center for Simulation of RF Wave Interactions with Magnetohydrodynamics
Monitor

SciDAC
Scientific Discovery through Advanced Computing

Guest
About | Login

Search:

Show My Runs | Show Purged Runs [Sorted by RunID in descending order]

RunID	Rate	Purge	Status	User	Last Update	Code	Time-stamp	Wall Time	Comments
				-------					
18066			Completed	tgjenkins	2010-11-04 14:22:11	Framework	5	429.87	Simulation Ended
18065			Completed	tgjenkins	2010-11-04 13:39:42	Framework	3	314.18	Simulation Ended
18064			Running	tgjenkins	2010-11-04 13:33:12	RF_GENRAY_Genray	0	15.07	task_id = 4 , Target = mpirun -np 1 /scr_oxygen/tgjenkins/nimall/install/genray/bin/xgenray
18063			Completed	tgjenkins	2010-11-04 09:20:15	Framework	0	18.71	Simulation Execution Error
18062			Completed	sjardin	2010-11-04 12:52:29	Framework	6.000	17676.20	Simulation Ended

- Monitoring portal gives an overview of completed and current runs by various IPS users.
- RunID links provide additional data about individual runs.

Detailed workflow information from a given run can be monitored through the web portal interface

Time	Commented by	Comment content

Time	Seq Num	Event Type	Code	State	Wall Time	Phys Time-stamp	Comment
2010-11-04 13:33:12	38	IPS_LAUNCH_TASK	RF_GENRAY_Genray	Running	15.07	0	task_id = 4 , Target = mpirun -np 1 /scr_oxygen/tgjenkins/nimall/install/genray/bin/xgenray
2010-11-04 13:33:12	37	GENRAY_EVENT	RF_GENRAY_Genray	Running	15.03	0	Initial GENRAY call.
2010-11-04 13:33:12	36	GENRAY_EVENT	RF_GENRAY_Genray	Running	15.01	0	Finished prepare_genray_input.
2010-11-04 13:33:11	35	COMPONENT_EVENT	RF_GENRAY_Genray	Running	12.18	0	Calling prepare_genray_input.
2010-11-04 13:33:11	34	IPS_STAGE_INPUTS	RF_GENRAY_Genray	Running	12.16	0	Files = genray.template
2010-11-04 13:33:10	33	GENRAY_EVENT	RF_GENRAY_Genray	Running	12.12	0	Moving template file to GENRAY working directory.
2010-11-04 13:33:10	32	IPS_STAGE_PLASMA_STATE	RF_GENRAY_Genray	Running	12.10	0	Success
2010-11-04 13:33:10	31	GENRAY_EVENT	RF_GENRAY_Genray	Running	12.06	0	GENRAY - getting current Plasma State files.
2010-11-04 13:33:10	30	GENRAY_EVENT	RF_GENRAY_Genray	Running	12.04	0	GENRAY received new data from NIMROD.
2010-11-04 13:33:09	29	IPS_CALL_END	DRIVERS_MHD_Nimrod_Driver	Running	11.13	0	Target = Nimrod@2:init(0.000)
2010-11-04 13:33:09	28	NIMROD_EVENT	MHD__Nimrod	Running	11.09	0	Finishing NIMROD component init call.
2010-11-04 13:33:09	27	NIMROD_EVENT	MHD__Nimrod	Running	11.07	0	NIMROD published the first event to GENRAY.
2010-11-04 13:33:09	26	IPS_UPDATE_PLASMA_STATE	MHD__Nimrod	Running	11.03	0	Success
2010-11-04 13:33:09	25	NIMROD_EVENT	MHD__Nimrod	Running	10.99	0	Updating Plasma State from NIMROD.
2010-11-04 13:33:08	24	IPS_STAGE_OUTPUTS	MHD__Nimrod	Running	10.96	0	Files = g000001.0000.00000
2010-11-04 13:33:08	23	NIMROD_EVENT	MHD__Nimrod	Running	10.94	0	Storing nimset output files.

Data from the monitor component is visible from the web portal

Portal Run ID: ◂ 18041 ▸ tgjenkins

Run Comment:	Exploring monitor functionality and improving portal output for coupled NIMROD/GENRAY runs.
Tokamak:	N/A
Shot No:	0005
Sim Name:	ngcouple_0005
Sim Runid:	ngcouple
Last Updated	2010-11-02 11:15:07
Host:	oxygen.txcorp.com
Output Prefix:	N/A
Tag:	N/A
Logfile:	N/A
Visualization URL:	View Data

Add a new comment for 18041

Time	Commented by	Comment content

Time	Seq Num	Event Type	Code	State	Wall Time	Phys Time-stamp	Comment
2010-11-02 11:15:07	222	IPS_END	Framework	Completed	603.05	4	Simulation Ended
2010-11-02 11:15:07	221	DRIVER_EVENT	DRIVERS_MHD_Nimrod_Driver	Running	603.03	4	Finished driver component finalize call.
2010-11-02 11:15:07	220	DRIVER_EVENT	DRIVERS_MHD_Nimrod_Driver	Running	603.01	4	Finished driver component step call.
2010-11-02	219	IPS_CALL_END	DRIVERS_MHD_Nimrod_Driver	Running	602.98	4	Target = Nimrod@2:step(1.000)

- From the “View Data” link, files exported by the monitor component can be viewed or downloaded.

Time-varying simulation data can be viewed using ElVis

http://w3.pppl.gov/elvis/

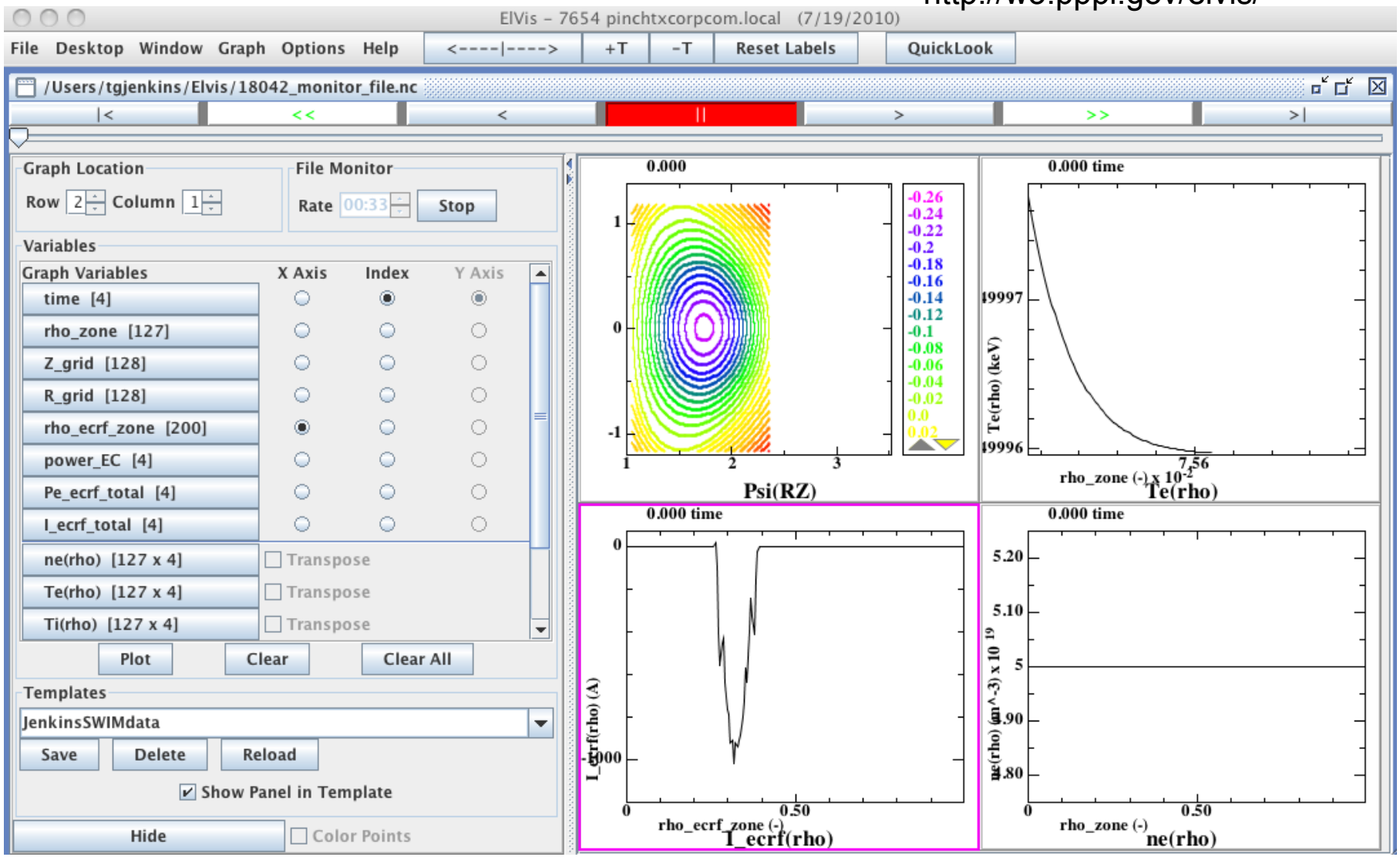

•Monitor files can be downloaded or viewed on the host machine. Movies available.

Present status and plans

•RF-induced quasilinear terms have been constructed from GENRAY data and have been included in NIMROD's fluid equations. The physics of the NIMROD/GENRAY interaction appears to be qualitatively correct, and detailed numerical benchmarks are under way.

•Coupled NIMROD/GENRAY simulations running under IPS are now possible. We can also now take advantage of the visualization features built into IPS (monitoring portal, ElVis viewing of simulation data, etc.)

•For NTM studies we will need better (higher-β) equilibria which are near the stability boundary for the NTM.

•Other plans – synthetic diagnostics, VisIt interfacing, numerical plasma control system for mode stabilization, more accurate closures, etc. Getting to the point where a lot of interesting things can be done.