Physics Letters A 372 (2008) 5534–5541

Contents lists available at ScienceDirect

Physics Letters A

www.elsevier.com/locate/pla

Flux control in networks of diffusion paths

A.I. Zhmoginov *, N.J. Fisch

Princeton Plasma Physics Laboratory, Princeton, NJ 08543, USA

ARTICLE INFO

Article history:
Received 20 March 2008
Received in revised form 19 June 2008
Accepted 25 June 2008
Available online 2 July 2008
Communicated by A.P. Fordy

Keywords:
Optimization
Diffusion
Electrical circuit
Cyclotron resonance
Alpha-channeling

ABSTRACT

A class of optimization problems in networks of intersecting diffusion domains of a special form of thin paths has been considered. The system of equations describing stationary solutions is equivalent to an electrical circuit built of intersecting conductors. The solution of an optimization problem has been obtained and extended to the analogous electrical circuit. The interest in this network arises from, among other applications, an application to wave–particle diffusion through resonant interactions in plasma.

1. Introduction

Diffusion, or random-walk processes are, in principle, straightforwardly treated in any geometry. Although the treatment is straightforward, in practice, it may be difficult to extract general properties of solutions in complex domains. However, certain geometries may be amenable to useful simplifications. An example of particular interest is when the diffusion is restricted to narrow one-dimensional paths. Networks of such domains are frequently used to model porous media [1–5] and fiber networks in brain white matter [6]. Also, a discrete model of diffusion path network, in which particles exhibit random-walk steps between nodes of some graph [7], is used to study computer and social networks [8–13], as well as city traffic [14].

Consider a rectangular network formed of vertical and horizontal intersecting diffusion paths (see Fig. 1). The diffusion tensor on each path is assumed diagonal with the transverse diffusion being much weaker than the diffusion along the path. The diffusion tensor in each intersection region is set to be equal to the sum of tensors of intersecting paths. The particle distribution $f(x, y)$ can then be found by solving the diffusion equation:

$$\frac{\partial f}{\partial t} = -\nabla \cdot \left[\hat{D}(\vec{x}) \cdot \nabla f\right], \tag{1}$$

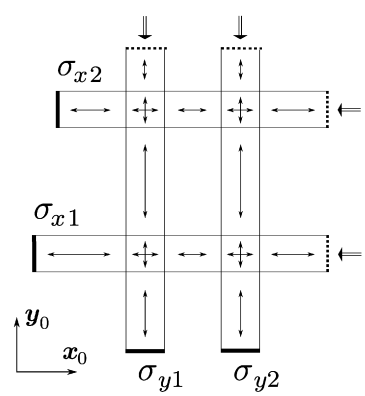

Fig. 1. Diffusion domain comprised of four intersecting paths. The diffusion tensor $\hat{D}$ on a path σ_{dn} outside of the intersection regions is $\hat{D}_p(\sigma_{dn}) = D_{dn}\vec{d}_0 + \mu\vec{\tau}_0(d)$, and $\hat{D} = \hat{D}_p(\sigma_1) + \hat{D}_p(\sigma_2)$ in the volume formed by intersection of two paths σ_1 and σ_2, where μ is the coefficient of a weak transverse diffusion, $d \in \{x, y\}$, $n \in \{1, 2\}$, and $\vec{\tau}_0(d)$ is equal to $\vec{y}_0$, when d is equal to $\vec{x}_0$ and vice versa. Boundary conditions are: $f = 0$ at the thick boundaries; $f' = 0$ (i.e. no particle flux) at the thin boundaries; and the input particle flux density is given through the dashed boundaries.

where $\hat{D}$ is a piecewise constant diffusion tensor, yielding a unique stationary solution of Eq. (1), assuming proper boundary conditions [15].

As will be shown in Appendices A and B, the stationary solution of Eq. (1) in a rectangular network of thin diffusion paths can be reduced to a set of linear equations, which can be solved for any particular configuration. However, the dependence of particle fluxes on diffusion coefficients is not linear; any change of the diffusion coefficient of a single path results in a redistribution of

* Corresponding author.
E-mail addresses: azhmogin@princeton.edu (A.I. Zhmoginov), fisch@princeton.edu (N.J. Fisch).

0375-9601/$ – see front matter
doi:10.1016/j.physleta.2008.06.068

the flux in the whole network. The goal of the present study is to solve an optimization problem of flux rearrangement in a network of diffusion paths. Specifically, we find the diffusion coefficients minimizing a weighted sum of the outgoing fluxes.

The solution of the optimization problem is shown to be a limit of a system with the diffusion coefficients equal to $1, \beta, \ldots, \beta^k$, with $k < 5$ as β goes to infinity. As demonstrated in Ref. [3], the network of diffusion paths is equivalent to the network of intersecting one-dimensional conductors (wires). As a result, all theorems true for one of the systems can be immediately applied to the other. The equivalence of systems is demonstrated and the optimization problem in networks of diffusion paths is extended to specific electrical circuits.

Besides being interesting by itself, the optimization problem has an important application to α-channeling [16] in tokamaks [17–19] and mirror machines [20,21]. In inhomogeneous magnetic field and an electrostatic wave, a charged particle exhibits random-walk motion along an effectively one-dimensional curve in the velocity space (Appendix C). In a system with several waves, the corresponding paths might intersect, forming a network which is capable of transporting particles between certain areas of the velocity space. In application to cooling down α particles in fusion devices, this concept is known as α-channeling. Maximization of the energy extracted from α particles by variation of the wave amplitudes and hence the effective diffusion coefficients of the corresponding paths results in the optimization problem solved in this Letter.

The Letter is organized as follows. In Section 2, we reduce the original system of finite-size intersecting diffusion paths to an approximate system of one-dimensional equations and discuss the relation of the random-walk in networks of paths to the random-walk on oriented graphs. In Section 3, we show the equivalence between the network of diffusion paths and the network of intersecting conductors. The main result of the Letter, a solution of the general optimization problem, is given in Section 4. Section 5 summarizes our conclusions. In Appendix A, we prove that a network of thin diffusion domains can be reduced to a system of intersecting one-dimensional paths. A local optimization of the weighted sum of outgoing fluxes by varying diffusion coefficients is considered in Appendix B. In Appendix C, we show the physical context of the optimization problem. In particular, we discuss the α-channeling concept and its optimization in tokamaks and mirror machines.

2. Basic equations

The optimization of a flux distribution in a rectangular network of diffusion paths can be performed analytically if each path can be approximated as a one-dimensional curve. As discussed in Appendix A, if the transverse diffusion is negligible, the path characteristic widths are much smaller than all distances between the paths, and the input flows are quasi-homogeneous, then Eq. (1) yields a stationary solution with a spatial scale much larger than the characteristic path width. Hence, particle flux distribution in a network of thin diffusion paths can be estimated by calculating fluxes in a network of one-dimensional paths (see Fig. 2). Particle density fluxes and particle densities in such network satisfy conditions: (a) particle conservation, reading

$$j^x_{i,j} - j^x_{i,j-1} + j^y_{i,j} - j^y_{i-1,j} = 0 \tag{2}$$

and (b) relation between the linear fall of particle density along the path, supporting the constant particle flux between two adjacent intersection volumes, and the flux itself:

$$j^x_{i,j} = \frac{f_{i,j+1} - f_{i,j}}{D_{x,i}\Delta x_j}, \qquad j^y_{i,j} = \frac{f_{i+1,j} - f_{i,j}}{D_{y,j}\Delta y_i}, \tag{3}$$

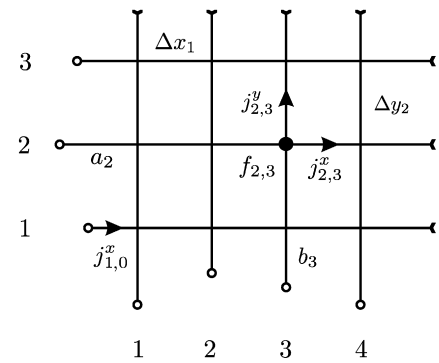

Fig. 2. An example of a network comprised of one-dimensional paths. Circles show sinks, while arrows at the ends of diffusion paths correspond to given input fluxes.

where $f_{i,j}$ is the particle density at the intersection of the horizontal and vertical diffusion paths with indices i and j correspondingly, further called the volume (i, j), Δx_i and Δy_i are the distances between horizontal and vertical paths with indices i and $i+1$ respectively, and $j^x_{i,j}$, $j^y_{i,j}$ are density fluxes through the segments linking volume (i, j) with volumes $(i, j+1)$ and $(i+1, j)$ correspondingly. The outgoing fluxes are denoted by $j^x_{i,0}$ and $j^y_{0,j}$. The optimization problem of particular physical interest for such a network is to find $\vec{D}_x$ and $\vec{D}_y$ minimizing a linear combination of the outgoing fluxes:

$$\min_{\vec{D}_x, \vec{D}_y} \left(\sum_{i=1}^{\bar{n}} w_{xi} j^x_{i0} + \sum_{j=1}^{\bar{m}} w_{yj} j^y_{0j} \right), \tag{4}$$

where $\bar{m}$ and $\bar{n}$ are total numbers of horizontal and vertical paths correspondingly, weights w_{xi} and w_{yi} are constants, densities at the left and bottom sides of the network are zero $[j^x_{i,0} = f_{i,1}/(a_i D_{x,i})$ and $j^y_{0,j} = f_{1,j}/(b_j D_{y,j})]$ and input fluxes at the top $j^y_{n,j}$ and to the right $j^x_{i,k}$ are given.

Random-walk of particles in a network of diffusion paths can be represented as a random-walk on an oriented graph with nodes corresponding to the intersection volumes, sinks and sources and with edges corresponding to possible particle transitions between these nodes. A probability p_{ij} of a particle jump from the node i to the node j is defined by assigning weights to all graph edges according to $p_{ij} = \xi_{ij}/\sum_k \xi_{ik}$, where ξ_{ij} is a weight of the edge connecting the node i with the node j, or zero if there is no such edge. One can show then that for every diffusion path network, there exists a weight distribution such, that the probabilities of particle jumps between the nodes are the same in both systems. Due to the fact that the inverse is not true, and some optimization problems of the form (4) for the graphs with variation over the edge weights cannot be reformulated for the diffusion path networks, one can argue that the class of optimization problems on oriented graphs is wider. For instance, the problem of maximum extractable energy from plasmas under wave-induced diffusion [22] can be reduced to an optimization of a random-walk on a certain graph. Another example is an optimization of outgoing fluxes (4) in a graph corresponding to the network of diffusion paths, in which jumps between two nodes are permitted in only one direction. Restricting all jumps to be directed towards the sinks, and the weights of the edges located on the same path to be equal, one defines a well posed optimization problem. The solution of this problem can be found using dynamic programming [23] by successively adding horizontal and vertical paths to the system. It can be shown that the optimum is achieved for a system with path weights proportional to $1, \beta, \ldots, \beta^k$ with $k < 5$ as β goes to infinity. The same property holds for the system of dif-

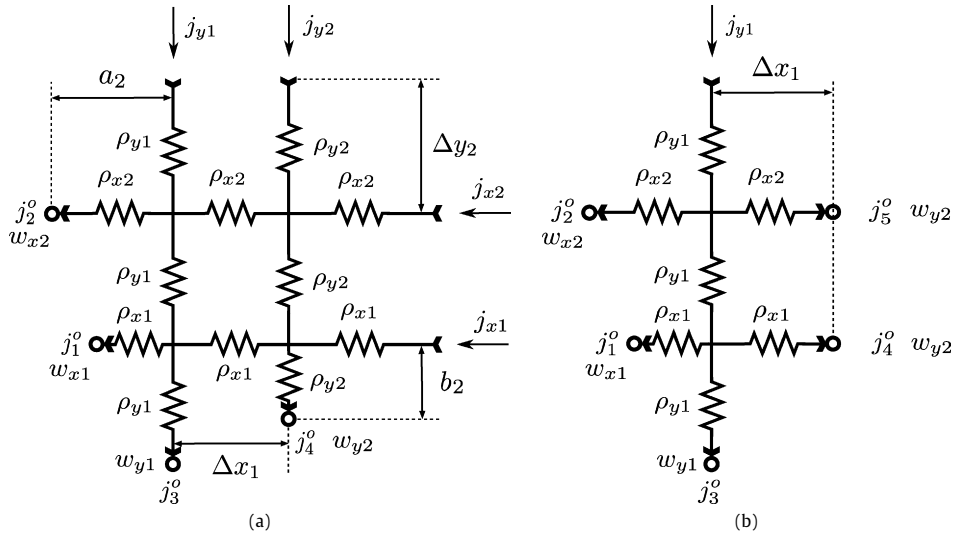

Fig. 3. (a) Electrical circuit equivalent to the simplest diffusion network formed by four intersecting diffusion paths. (b) The same circuit when the resistivity of the second vertical diffusion path is much smaller than all the others.

fusion paths, however the proof of this fact is different and will be given in Section 4.

3. Equivalence to electrical circuit

Replacing j by currents, f by potentials, and D by conductivities of a unit length ρ^{-1} in Eqs. (2) and (3), the optimization problem (4) becomes equivalent to an analogous optimization problem for electrical circuit comprised of intersecting homogeneous wires with grounded left and bottom ends ($f = 0$) and given currents through top and right ends. Equivalence between two systems allows to apply any knowledge about one system to another. For example, the distribution of currents in the circuit can be found as a solution of a variational problem:

$$\min_{\vec{I}\in S} \sum_{k=1}^{n} I_k^2 \Delta l_k \rho_k,$$

where n is a number of the edges, $\vec{I}$ is an n-dimensional vector of the currents, ρ_k^{-1} is the conductivity of a unit length of the kth edge, Δl_k is the length of this edge, and $S \subset \mathbb{R}^n$ is such that $\sum_{i\in e(v)} I_i = 0$ for every circuit node v, with $e(v)$ being a set of indices of edges adjacent to it. Thus reformulated, the variational problem in the network of intersecting diffusion paths reads:

$$\min_{\vec{j}\in S} \sum_{k=1}^{n} j_k^2 \Delta l_k / D_k,$$

where a vector of currents $\vec{I}$ is replaced by a vector of particle fluxes $\vec{j}$, and conductivities ρ_k^{-1} are replaced by diffusion coefficients D_k.

An example illustrating the transition from the optimization problem (4) to that for an electrical circuit is the optimization problem for the intersection of two pairs of parallel wires (Fig. 3(a)). Redirection of all input currents to the horizontal (vertical) exit with index x_1 (y_1) is possible in a limit $\beta \to 0$ of the configuration $\rho_{x1} = \beta\rho_{y1} = \beta^2\rho_{x2} = \beta^2\rho_{y2}$ ($\rho_{y1} = \beta\rho_{x1} = \beta^2\rho_{x2} = \beta^2\rho_{y2}$). This solves the optimization problem in the case when w_{x1} or w_{y1} are smaller than the other weights. The case when w_{x2} (w_{y2}) is the smallest weight is more difficult because it is impossible to direct all input currents into the corresponding exit even if ρ_{x2} (ρ_{y2}) is much smaller than the other weights. However, as shown in Section 4, the minimum of the weighted sum is reached when the resistance ρ_{x2} (ρ_{y2}) is the smallest and the system is reduced to the circuit shown on Fig. 3(b). The optimization problem is then reformulated as:

$$\min_{\vec{j}} w = \min_{\vec{j}} [w_{x1} j_1 + w_{x2} j_2 + w_{y1} j_3 + w_{y2} j_4 + w_{y2} j_5], \tag{5}$$

where output currents are connected by $j_i = j_1 + j_2 + j_3 + j_4 + j_5$, $j_2/j_5 = \Delta x_1/a_2$, $j_1/j_4 = \Delta x_1/a_1$. Substituting these expressions into Eq. (5), the problem reduces to the minimization of a linear function

$$w = w_{x1} j_4 \Delta x_1/a_1 + w_{x2} j_5 \Delta x_1/a_2 + w_{y2} j_4 + w_{y2} j_5 + w_{y1}(j_i - j_4 \Delta x_1/a_1 - j_5 \Delta x_1/a_2 - j_4 - j_5)$$

over a triangle in (j_4, j_5) space, formed by three inequalities: $j_4 \geqslant 0$, $j_5 \geqslant 0$, $j_i \geqslant j_4(\Delta x_1/a_1 + 1) + j_5(\Delta x_1/a_2 + 1)$. The minimum of a linear function is reached in one of the triangle's vertices [24], and thus three different solutions are possible:

(a) $\rho_{y2} = \beta\rho_{x2} = \beta^2\rho_{x1} = \beta^2\rho_{y1}$,

(b) $\rho_{y2} = \beta\rho_{x1} = \beta^2\rho_{x2} = \beta^2\rho_{y1}$,

(c) $\rho_{y2} = \beta\rho_{y1} = \beta^2\rho_{x1} = \beta^2\rho_{x2}$.

4. Solution for the diffusion path network

In the general case of $n \times m$ rectangular network of diffusion paths, the minimum in Eq. (4) is reached in the limit $\beta \to \infty$ of a network with finite diffusion coefficients equal to $1, \beta, \ldots, \beta^k$ with $k < 5$. This property, which is the main result of the Letter, is proved in this section in two steps. First, we note that the diffusion path with a minimum-weighted sink (we take this weight to be equal to 0 for distinctness) should have a diffusion coefficient much greater than the diffusion coefficients of the paths intersecting it. Then, using independence of the subnetworks obtained by partition of the original network by the minimum-weighted path, solutions in each subsystem is obtained separately.

When the sink of the leftmost (bottom) diffusion path has the smallest weight, the optimization problem has a trivial solution. In this case, all particles can be directed to the minimum-weighted path by making its diffusion coefficient large compared to the diffusion coefficient of the bottom horizontal (leftmost vertical) path, which should in turn be much larger than diffusion coefficients of other paths.

In a more general case, when the minimum-weighted sink is not on the leftmost or the bottom path, the optimum is also achieved when the diffusion coefficient $D_{\min}$ of the minimum-weighted path is much larger than the coefficients D_{int} of the paths intersecting it. This can be proved using a random-walk process analogy. Compare a configuration in which $D_{\min} \sim D_{\text{int}}$ with the same configuration having $D_{\min} \gg D_{\text{int}}$. For each particle trajectory which does not cross the minimum-weighted path in the large-$D_{\min}$ system, there is an identical particle trajectory in the finite-$D_{\min}$ system with the same realization probability and the same output weight. On the other hand, for each trajectory crossing the minimum-weighted path (and then leaving immediately) in the large-$D_{\min}$ system, there is a family of trajectories in the finite-$D_{\min}$ system with the same path before the crossing and the same overall probability, but larger or equal average output weight. Thus, averaging over all trajectories, one concludes that the weight defined by Eq. (4) in the large-$D_{\min}$ system is smaller or equal to the weight in the finite-$D_{\min}$ system.

The minimum-weighted path divides the network into two subnetworks. An optimal solution to the right of this path (we choose vertical orientation of the minimum-weighted path for distinctness) is trivial: all vertical diffusion paths have diffusion coefficients much smaller than the diffusion coefficients of every horizontal path. In this case, all particles entering the system to the right of the minimum-weighted path are captured by it. On the other hand, the part of the network to the left of the minimum-weighted path, which we will call *enclosed*, can be treated as an isolated part in which points of intersection with the minimum-weighted path are replaced by particle sinks with zero weights (the minimum weight in the system). To specify the network geometry, the number of vertical and horizontal paths in the enclosed system are denoted by m and n correspondingly, fluxes entering the system from above are denoted by j_k^i, distances between horizontal or vertical diffusion paths with indices i and $i+1$ are denoted by Δx_i and Δy_i, and the distances from the leftmost vertical path to the left sinks and from the bottom horizontal path to the bottom sinks are denoted by a_i and b_i correspondingly.

To solve the optimization problem in a general case, we first analyze a horizontal path with fixed vertical input and output fluxes. Then we solve an optimization problem in a class of networks, in which the relations between vertical fluxes and corresponding differences of densities of adjacent intersection volumes are omitted. We prove that there are many optimal solutions, one of which can be asymptotically reached in a conventional diffusion path network.

Consider a single horizontal diffusion path with vertical fluxes j_k entering from the above, vertical outgoing fluxes i_k, and the left outgoing flux j_0. The equation for j_0 then reads:

$$j_0 a_k + (j_0 - \Delta_1)\Delta x_1 + (j_0 - \Delta_1 - \Delta_2)\Delta x_2 + \cdots + (j_0 - \Delta_1 - \Delta_2 - \cdots - \Delta_m)\Delta x_m = 0,$$

where $\Delta_k = j_k - i_k$. This solution is correct when particle densities in all intersection volumes are nonnegative, which results in m conditions:

$$j_0 \geqslant 0,$$

$$j_0 a_k + (j_0 - \Delta_1)\Delta x_1 \geqslant 0,$$

$$\cdots$$

$$j_0 a_k + (j_0 - \Delta_1)\Delta x_1 + (j_0 - \Delta_1 - \Delta_2)\Delta x_2 + \cdots + (j_0 - \Delta_1 - \Delta_2 - \cdots - \Delta_{m-1})\Delta x_{m-1} \geqslant 0.$$

Consider the optimization problem in a network of diffusion paths, in which vertical fluxes and corresponding differences of densities are not related. In such a network, the fluxes on all segments of vertical diffusion paths, or $\Delta_{ij} = j^y_{i,j} - j^y_{i-1,j}$, can be defined independently. Limiting all particle densities and outgoing vertical fluxes to be positive, $nm+m$ linear conditions are imposed on the system:

$$j_0 = \frac{\sum_{i=1}^m \sum_{j=1}^i \Delta_{kj}\Delta x_i}{a_k + \Delta x_1 + \cdots + \Delta x_m} \geqslant 0, \tag{6}$$

$$j_0 a_k + (j_0 - \Delta_{k1})\Delta x_1 \geqslant 0, \quad \ldots, \tag{7}$$

$$j_0 a_k + \sum_{i=1}^{m-1} \Delta x_i \left(j_0 - \sum_{j=1}^{i} \Delta_{kj} \right) \geqslant 0 \tag{8}$$

for $1 \leqslant k \leqslant n$, and

$$\sum_{k=1}^{n} \Delta_{kl} \leqslant j_l^i \quad \text{for } 1 \leqslant l \leqslant m. \tag{9}$$

Under these conditions, the minimum weight of the enclosed system is nonnegative and the expression for the linear weight function w reads:

$$w = \sum_{k=1}^{n} w_{xk} \frac{\sum_{i=1}^m \sum_{j=1}^i \Delta_{kj}\Delta x_i}{a_k + \Delta x_1 + \cdots + \Delta x_m} + \sum_{k=1}^{m} w_{yk} \left(j_k^i - \sum_{l=1}^{n} \Delta_{lk} \right). \tag{10}$$

The solution of a linear optimization problem is reached in the vertex of nm-dimensional manifold defined by Eqs. (6)–(9). This vertex corresponds to the intersection of nm hyperplanes (out of $nm+m$ conditions), limiting it. In terms of conditions (6)–(9), this means that $0 \leqslant s \leqslant m$ vertical output fluxes are zero and there are at least $nm - s$ intersection volumes with vanishing f. Due to the fact that the horizontal flux cannot emerge from the intersection volume with zero density, there should be exactly s volumes with nonzero densities in the system with all input fluxes greater than zero. Furthermore, every vertical path with vertical output flux equal to zero should contain just one such volume; henceforth we call such configurations *primitive*.

The found optimum cannot necessarily be realized in an ordinary network of intersecting horizontal *and vertical* diffusion paths. However, we show here that any such optimum can be transformed to another configuration with exactly the same weight, which can be represented as a network of both horizontal and vertical diffusion paths. We use a convenient notation, characterizing each primitive configuration by $(m+1)$-dimensional vector $(\alpha_1, \ldots, \alpha_m, 0)$, where α_k is equal to l if the nonzero density volume is situated on the intersection of the vertical path with index k and the horizontal diffusion path with index l, and α_k is equal to zero if there is no such intersection volume on this vertical path. Considering a primitive solution of the minimization problem corresponding to a vector $(\alpha_1, \ldots, \alpha_m, 0)$, we can construct other primitive configurations with the same weight applying a following lemma.

Lemma 1. *For every primitive configuration of the form* $(\alpha_1, \ldots, \alpha_l, s, r, \ldots, r, 0, \alpha_q, \ldots, \alpha_m, 0)$ [*or* $(\alpha_1, \ldots, \alpha_l, s, r, \ldots, r, 0)$], *where* $s > 0$, $r > 0$ *and* $s \neq r$, *there exists another primitive configuration corresponding to the vector* $(\alpha_1, \ldots, \alpha_l, s, s, \ldots, s, 0, \alpha_q, \ldots, \alpha_m, 0)$ [*or* $(\alpha_1, \ldots, \alpha_l, s, s, \ldots, s, 0)$], *which has the same weight.*

Proof. Consider a primitive configuration defined by:

$$f_{ij}^{\text{II}} = 0, \quad i \neq s,$$

$$f_{sj}^{\text{II}} = \frac{D_{xr} f_{rj}^{\text{I}}}{D_{xs}}, \quad l+2 \leqslant j \leqslant q-2,$$

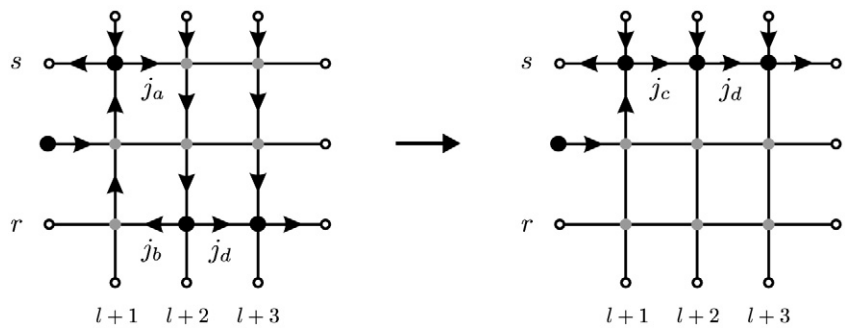

Fig. 4. Construction of a primitive configuration described by vector $(\ldots, s, s, s, \ldots, s, 0, \ldots)$ from a primitive solution defined by vector $(\ldots, s, r, r, \ldots, r, 0, \ldots)$. Denoting by f^{II} particle densities in the constructed system and by f^{I} particle densities in the original system, the construction is defined by relation $f^{\mathrm{II}}_{sj} = D_{xr} f^{\mathrm{I}}_{rj}/D_{xs}$ for indices $j \geqslant l+2$. As a result, all flows except for j_a, j_b and j_c are left unchanged. All segments without arrows indicate the segments with zero fluxes. Relation $j_c = j_a - j_b$ proves that all outgoing flows are the same in both systems.

where f^{I}_{ij} and f^{II}_{ij} are particle densities in the original and constructed solutions correspondingly (Fig. 4). In the considered configuration all horizontal fluxes between nonzero density volumes are left the same as in the original system, except for the volumes on vertical paths with indices $l+1$ and $l+2$. This, in turn, means that all outgoing fluxes for vertical paths with indices ranging from $l+3$ to $q-2$ are left equal to zero. Noting that $j_c = j_a - j_b$, we also see that $\sum_k \Delta^{\mathrm{I}}_{k,l+1} = \sum_k \Delta^{\mathrm{II}}_{k,l+1} = j^i_{l+1}$ and $\sum_k \Delta^{\mathrm{I}}_{k,l+2} = \sum_k \Delta^{\mathrm{II}}_{k,l+2} = j^i_{l+2}$, which suggests that outgoing fluxes for vertical paths with indices $l+1$ and $l+2$ are equal to zero, too. This proves that the weight of constructed system is equal to the weight of the original configuration because all outgoing fluxes are the same in both configurations. □

Applying the lemma repeatedly, one can prove that for any primitive configuration there exists a configuration with the same weight, which is described by either a vector $(s_1, \ldots, s_1, 0, \ldots, 0, s_2, \ldots, s_2, 0, \ldots, 0, s_k, \ldots, s_k, 0)$, or a vector $(0, \ldots, 0, s_1, \ldots, s_1, 0, \ldots, 0, s_2, \ldots, s_2, 0, \ldots, 0, s_k, \ldots, s_k, 0)$ with $s_i > 0$. Noticing then that for every primitive configuration of the form $(\ldots, 0, r, \ldots, r, 0, \ldots, 0)$ with $r > 0$, there exists another primitive configuration having the same weight and described by the vector $(\ldots, 0, s, \ldots, s, 0, \ldots, 0)$ with $s > 0$, one can state that an arbitrary primitive optimum is equivalent to another primitive configuration with all nonzero density volumes situated on a single horizontal diffusion path with index denoted further by s. Interestingly, such configurations can be asymptotically reached as $\beta \to \infty$ in a conventional network of intersecting horizontal *and vertical* diffusion paths. The diffusion coefficients in the diffusion path network are to be set as follows (if there is at least one nonzero intersection volume in the system): the diffusion coefficient of the horizontal path with index s is to be much larger ($\sim \beta^3$) than the diffusion coefficients of the rest of horizontal paths ($\sim \beta$) and vertical paths with nonzero density volumes ($\sim \beta^2$); remaining vertical paths are to have $D_y \sim \beta^4$.

Having determined the form of the optimal solution, Eq. (10) can be rewritten as

$$w = w_{xs} \frac{\sum_{i=1}^{m} \sum_{j=1}^{i} \Delta_{sj} \Delta x_i}{a_s + \Delta x_1 + \cdots + \Delta x_m} + \sum_{l=1}^{m} w_{yl} \left(j^i_l - \Delta_{sl} \right), \tag{11}$$

where $\Delta_{sl} \leqslant j^i_l$; then the value of s can be then found by minimizing

$$\frac{w_{xs}}{a_s + \Delta x_1 + \cdots + \Delta x_m}. \tag{12}$$

By substituting the corresponding values to Eq. (11), the optimization problem is reformulated as a minimization of

$$\min \sum_{j=1}^{m} \mu_j \Delta_{sj} \tag{13}$$

over a manifold limited by Eqs. (6)–(8) and m conditions $\Delta_{sl} \leqslant j^i_l$. The solution of this optimization problem defines which of vertical diffusion paths are to have diffusion coefficients proportional to β^4 and which are to be proportional to β^2.

5. Conclusions

The optimization of the exit flux rearrangement in the rectangular network of one-dimensional diffusion paths as defined by Eq. (4) is obtained. The solution is also applicable to the electrical circuit comprised of intersecting conductors.

The solution of the optimization problem was obtained by extending the class of the networks over which the optimization was performed and showing that one of the optimal solutions is asymptotically achieved in the original class as diffusion coefficients of certain diffusion paths become large compared to the others. More specifically, the largest diffusion coefficient, proportional to β^4, where $\beta \to \infty$, should be assigned to the minimum-weighted diffusion path (vertical for distinctness). To the right of this diffusion path all vertical paths are assigned $D_y \sim 1$. The remaining diffusion coefficients are to be determined solving a simpler optimization problem (13) and finding index s, which minimizes Eq. (12). Solution of Eq. (13) determines which vertical paths in the enclosed system are to have $D_y \sim \beta^4$ and which $D_y \sim \beta^2$. Horizontal paths with indices $k \neq s$ are assigned $D_x \sim \beta$ and $D_x \sim \beta^3$ is assigned to the horizontal path with index s.

Acknowledgements

This work was supported by DOE Contracts No. DE-FG02-06ER54851 and DE-AC0276-CH03073.

Appendix A. One-dimensional model of the particle distribution function

In this appendix we show that a spatial scale of the particle density distribution in a rectangular network of thin diffusion paths greatly exceeds a characteristic diffusion path width. This fact allows us to employ a one-dimensional model for the distribution function, considering dependence only in the path direction.

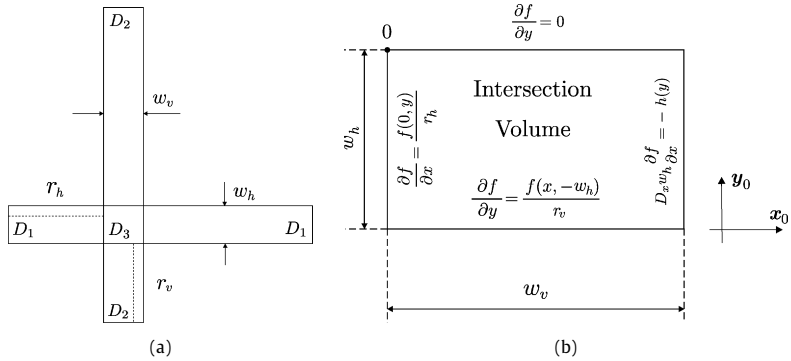

Fig. 5. (a) Two intersecting diffusion paths and their geometrical sizes; (b) intersection volume and the boundary conditions.

Consider first the simplest network formed of two straight effectively one-dimensional diffusion paths intersecting at a right angle (Fig. 5(a)). In steady state Eq. (1) reads

$$D_{xx}(x,y)\frac{\partial^2 f}{\partial x^2}+D_{yy}(x,y)\frac{\partial^2 f}{\partial y^2}=0. \tag{A.1}$$

It is solved for the distribution function f in the domain comprised of two, horizontal and vertical narrow stripes, with widths w_h and w_v correspondingly. At one exit of each path (distances r_h and r_v apart from the intersection region) the particles are absorbed and $f=0$, at the other two exits input particle flux densities are given, and since the problem is linear, one of the two can be taken equal to zero.

When the parameter μ, which is responsible for a weak transverse diffusion, is negligible, an approximate solution outside of intersection region reads: $f(x,y)=h_1(y)+h_2(y)x-\mu h_1''(y)x^2/(2D_x)-\mu h_2''(y)x^3/(6D_x)+O(\mu^2)$ for horizontal path, or $f(x,y)=h_1(x)+h_2(x)y-\mu h_1''(x)y^2/(2D_y)-\mu h_2''(x)y^3/(6D_y)+O(\mu^2)$ for vertical path, where h_1 and h_2 are arbitrary smooth functions with characteristic spatial scales $L_i=(h_i''/h_i)^{-1/2}$. Furthermore, when condition $(\mu/\min D_i)(\max l_i^2/\min L_i^2)\ll 1$, with l_i being a path length, is satisfied, the solution outside of the intersection region can be approximated by the leading order terms. Thus, the solution in the original domain might be obtained by solving the diffusion equation in the intersection volume with a new set of boundary conditions (see Fig. 5(b)):

$$\left.\frac{\partial f}{\partial y}\right|_{y=0}\approx 0,\qquad D_x w_h\left.\frac{\partial f}{\partial x}\right|_{x=w_v}\approx -h(y),$$
$$\left.\frac{\partial f}{\partial y}\right|_{y=-w_h}\approx\frac{f(x,-w_h)}{r_v},\qquad \left.\frac{\partial f}{\partial x}\right|_{x=0}\approx\frac{f(0,y)}{r_h}, \tag{A.2}$$

where $h(y)$ is the horizontal input flux density.

Eq. (A.1) with boundary conditions (A.2) can be solved by separating variables:

$$f\approx\sum_{k=0}^{\infty}c_k\left[\left(1+\frac{2}{\lambda_{xk}r_h-1}\right)\exp(\lambda_{xk}x)+\exp(-\lambda_{xk}x)\right]\cos\lambda_{yk}y,$$

where c_k are constant coefficients, $\lambda_{xk}=\sqrt{\lambda_k/D_x}$, $\lambda_{yk}=\sqrt{\lambda_k/D_y}$, and λ_k is found from the equation:

$$\tan^{-1}\left(w_h\sqrt{\lambda_k/D_y}\right)=r_v\sqrt{\lambda_k/D_y}. \tag{A.3}$$

Assuming that the width of the horizontal path w_h is much smaller than the distance from the intersection volume to the particle sink r_v, Eq. (A.3) can be solved approximately:

$$\lambda_{y0}\approx\frac{1}{(r_v w_h)^{1/2}}\ll\frac{1}{w_h},$$
$$\lambda_{yk}\approx\frac{\pi k}{w_h}+\frac{1}{r_v\pi k}\approx\frac{\pi k}{w_h},\quad \text{for } k>0.$$

The relation $\lambda_{y0}\ll\lambda_{yk}$ for $k>0$ suggests that if the input flux density $h(y)$ is quasi-homogeneous, $c_k\ll c_0$. Neglecting the terms of order w_h/r_v, the fraction of the input particle flux absorbed at the left loss boundary is then given by:

$$\frac{J_{x=0}}{J_{x=w_v}}\approx\frac{1}{1+\lambda_{x0}^2 w_v r_h}=\left(1+\frac{D_y w_v r_h}{D_x w_h r_v}\right)^{-1}=\left(1+\frac{D_y w_v r_h}{D_x w_h r_v}\right)^{-1}.$$

Thus, in a steady state regime, the net particle flux J incoming by the horizontal diffusion path divides into two outgoing fluxes J_h and J_v:

$$J_h\approx J\cdot\left(1+\frac{D_y w_v r_h}{D_x w_h r_v}\right)^{-1},\qquad J_v=J-J_h. \tag{A.4}$$

Particularly, when $D_y w_v r_h$ is much smaller or much larger than $D_x w_h r_v$, the major part of the input flux will be absorbed at the, whereas in a symmetric system with $D_y w_v r_h=D_x w_x r_v$, the input flux is divided into two equal fluxes.

Consider a network comprised of $\bar{n}$ horizontal and $\bar{m}$ vertical paths, and denote by $\vec{D}_x$ and $\vec{D}_y$ vectors of diffusion coefficients of horizontal and vertical diffusion paths correspondingly. The flux distribution in a such network is a sum of distributions in two simpler systems: (i) the system with zero vertical input fluxes and the horizontal input flux densities equal to $\vec{j}_x^i(y)$ and (ii) the system with zero horizontal input fluxes and the vertical input flux densities equal to $\vec{j}_x^i(y)$. The solution f_{ijk} in the intersection region formed by horizontal and vertical diffusion paths with indices i and j can be found in the form $f_{ijk}=X_{ijk}(x)Y_{ijk}(y)$, where X_{ijk} and Y_{ijk} satisfy

$$\frac{X_{ijk}''}{X_{ijk}}=\frac{\lambda_{ijk}}{D_{xi}},\qquad \frac{Y_{ijk}''}{Y_{ijk}}=-\frac{\lambda_{ijk}}{D_{yj}},$$

with k enumerating eigenfunctions and eigenvalues λ_{ijk}. For convenience, we assign the origin to the volume's left bottom corner.

Considering, for example, a system with zero vertical input fluxes, the vertical eigenfunctions $Y_{ijk}(y)$ can be found independently in each column as follows. Noticing that the intersection volumes on a vertical path are restricted to have the same horizontal structure, one concludes that λ_{ijk} for different values of i are connected through $\lambda_{ijk}=\lambda_{jk}D_{xi}$. Values of λ_{jk} can then be found using vertical boundary conditions simplified when μ is negligible: (a) boundary condition at the bottom intersection region:

$$Y_{1jk}'(0)=Y_{1jk}/b_j,$$

where b_j is the distance to the particle sink on the vertical path with index j; (b) zero input flux density condition at the top intersection region $Y_{njk}'(y_n)=0$, and (c) conditions necessary to connect adjacent intersection volumes:

$$Y_{i,j,k}'(y_i)=Y_{i+1,j,k}'(0),$$
$$Y_{i+1,j,k}(0)-Y_{i,j,k}(y_i)=Y_{i,j,k}'(y_i)\Delta y_i=Y_{i+1,j,k}'(0)\Delta y_i,$$

where y_i is the width of the horizontal path with index i, and Δy_i is the distance between horizontal paths with indices i and $i+1$. These equations can be solved approximately when the vertical and the horizontal diffusion path widths x_i and y_j are much smaller than all distances between paths Δx_j, Δy_i and distances to the sinks a_i and b_j, by considering the leading zeroth-order terms in the expansion by small parameters $\varepsilon_i = \max\{x_i/\Delta x_j, x_i/a_j, y_i/\Delta y_j, y_i/b_j\}$. Assuming $\lambda_j y_i^2 D_{xi}/D_{yj} \ll 1$ and $\lambda_j > 0$ (which we later show to be consistent with our final result), we can use small-value expansions, as we did solving Eq. (A.3), to obtain a simplified equation for the zeroth eigenvalue λ_{j0}:

$$s_{i+1} = \frac{s_i}{1-s_i}\frac{D_{x,i+1}}{D_{x,i}}\frac{y_{i+1}}{y_i} + \frac{\Delta y_i}{b_j}\tau_{i+1},$$
$$s_n = 1, \qquad s_1 = \tau_1, \tag{A.5}$$

where $\tau_i = \lambda_{j0} D_{x,i} y_i b_j / D_{y,j}$. For any k, the solution for τ_k of this recursive scheme is of order of one when all equation parameters are of order of one, which suggests that all possible solutions for λ_{j0} are of order of $(yb)^{-1}$ and assumption used above holds. It can be proved that, in the general case, Eq. (A.5) has exactly n non-negative and no negative solutions, which justifies the assumption $\lambda_j > 0$.

Once the eigenvalues λ_{j0} and corresponding eigenfunctions are calculated, the horizontal quasi-homogeneous input flux density can be decomposed by eigenfunctions of the rightmost vertical path. Quasi-homogeneity of the input flux density suggests that its decomposition is dominated by the zeroth eigenfunctions corresponding to eigenvalues λ_{j0}, because all other eigenfunctions oscillate a few times on a width of at least one of diffusion paths. Noticing that the decomposition of zeroth eigenfunction of one vertical diffusion path by eigenfunctions of the adjacent path contains just zeroth eigenfunctions to the zeroth order term in a small parameter $\varepsilon = \max \varepsilon_i$, one can couple zeroth-order eigenfunctions of adjacent vertical diffusion paths and find an approximate solution everywhere in the system. Obtained solution is a linear combination of just zeroth eigenvalues (to the zeroth order in small parameters), which suggests that the spatial scale of the particle distribution function is much larger than the characteristic path width.

Appendix B. Derivative calculation

In practical applications, the optimal solution obtained in Section 4 might be impossible to achieve. In α-channeling implementation, for instance, infinitely large diffusion coefficient would imply an infinitely large wave amplitude. One can resolve this by introducing additional limitations on the parameter space or adding terms depending on $\vec{D}_x$ and $\vec{D}_y$ into the optimized functional. Numerical algorithms suitable for solution of such extended optimization problem, like gradient descent method, might require calculation of derivatives of the weight function w with respect to the diffusion coefficients. In this section we outline such calculation for an isolated system enclosed by the minimum-weighted diffusion path.

Denote by $\vec{x}_i$ a vector of particle densities and their derivatives down the path for the intersection volumes situated on a horizontal path with index i: $\vec{x}_i = (f_{i1}, f_{i2}, \ldots, f_{im}, f'_{i1}, \ldots, f'_{im})$, where f'_{ij} is a y-derivative of f down the vertical path with index j. To solve for particle densities given incoming fluxes, two $2m \times 2m$ linear operators $\hat{t}_i$ and $\hat{T}_k$ are introduced:

$$\vec{x}_{i+1} = \hat{t}_i(D_{xi})\vec{x}_i,$$
$$\hat{T}_k = \hat{t}_k\hat{t}_{k-1}\cdots\hat{t}_1 = \begin{pmatrix} \hat{A}_k & \hat{B}_k \\ \hat{C}_k & \hat{D}_k \end{pmatrix}, \quad \hat{T}_0 = \hat{I},$$

where $\hat{I}$ is an identity operator. Given the m-dimensional vector of input fluxes $\vec{I}_0$ entering the system from above, the state vector at the bottom diffusion path is calculated:

$$\vec{x}_1 = \hat{\kappa}^{-1}(\vec{D}_x)\begin{pmatrix} \hat{\Lambda}_y^{-1}\vec{I}_0 \\ \hat{\Lambda}_b^{-1}\hat{\Lambda}_y^{-1}\vec{I}_0 \end{pmatrix}$$
$$= \begin{pmatrix} \hat{C}_n + \hat{D}_n\hat{\Lambda}_b^{-1} & 0 \\ 0 & \hat{C}_n + \hat{D}_n\hat{\Lambda}_b^{-1} \end{pmatrix}^{-1}\begin{pmatrix} \hat{\Lambda}_y^{-1}\vec{I}_0 \\ \hat{\Lambda}_b^{-1}\hat{\Lambda}_y^{-1}\vec{I}_0 \end{pmatrix},$$

where $(\hat{\Lambda}_b)_{ij} = \delta_{ij} b_j$ and $(\hat{\Lambda}_y)_{ij} = \delta_{ij} D_{yj}$ are $m \times m$ matrices and $\hat{t}_n$ is constructed by introducing a virtual horizontal path with index $n+1$ having vanishing $D_{x,n+1}$ and situated arbitrary distance Δy_n apart from the adjacent path. The value of the weight function can then be calculated:

$$w = \left[\vec{w}_y^{\mathrm{T}}\hat{\Lambda}_y\hat{\Lambda}_b^{-1} + \left(\frac{w_{x1}D_{x1}}{a_1}\hat{I} + \frac{w_{x2}D_{x2}}{a_2}\hat{T}_1 + \cdots + \frac{w_{xn}D_{xn}}{a_n}\hat{T}_{n-1}\right)_1\right]\vec{x}_1, \tag{B.1}$$

where $(\hat{S})_1$ denotes the first row of the matrix $\hat{S}$, and $\vec{w}_x$, $\vec{w}_y$ are vectors of positive weights of the leftmost horizontal and vertical sinks relative to the weight w_0 of the rightmost horizontal sinks. Using $(\hat{S}^{-1})' = -\hat{S}^{-1}\hat{S}'\hat{S}^{-1}$, and

$$\frac{\partial \hat{t}_i}{\partial D_{xk}} = \delta_{k,i}\begin{pmatrix} \Delta y_i \hat{c}'_i & 0 \\ \hat{c}'_i & 0 \end{pmatrix}$$
$$= \delta_{k,i} D_{xi}^{-1}\left(\hat{t}_i - \hat{I} - \Delta y\begin{pmatrix} 0 & \hat{I} \\ 0 & 0 \end{pmatrix}\right)$$
$$= \delta_{k,i} D_{xi}^{-1}\big(\hat{t}_i(D_{xi}) - \hat{t}_i(0)\big),$$

one can differentiate Eq. (B.1) with respect to D_{xk} to obtain:

$$\frac{\partial w}{\partial D_{xk}} = \left[\frac{w_{xk}}{a_k}\hat{I} + \hat{A}\big(\hat{t}_k - \hat{t}_k(D_{xk}=0)\big)\right]_1 \hat{T}_{k-1}\vec{x}_1 - \left[\vec{w}_y^{\mathrm{T}}\hat{\Lambda}_y\hat{\Lambda}_b^{-1} + (\hat{B})_1\right]\cdot\hat{\kappa}^{-1}\frac{\hat{\kappa} - \hat{\kappa}(D_{xk}=0)}{D_{xk}}\vec{x}_1, \tag{B.2}$$

where

$$\hat{A} = \left(\frac{w_{x,k+1}D_{x,k+1}}{a_{k+1}D_{xk}}\hat{I} + \frac{w_{x,k+2}D_{x,k+2}}{a_{k+2}D_{xk}}\hat{t}_{k+1} + \frac{w_{x,k+3}D_{x,k+3}}{a_{k+3}D_{xk}}\hat{t}_{k+2}\hat{t}_{k+1} + \cdots\right),$$
$$\hat{B} = \frac{w_{x1}D_{x1}}{a_1}\hat{I} + \frac{w_{x2}D_{x2}}{a_2}\hat{T}_1 + \cdots + \frac{w_{xn}D_{xn}}{a_n}\hat{T}_{n-1},$$

and where we used $D_{xk}\hat{\kappa}' = \hat{\kappa}(\vec{D}_x) - \hat{\kappa}(D_{xk}=0)$. Consider a network formed from the original by removing kth horizontal path, or equivalently by taking $D_{xk} = 0$; henceforth we call such network *reduced*. Denote by $\vec{I}_r$ such vector of input fluxes entering the reduced system, that the values of f at its bottom horizontal path are equal to $\vec{x}_1$:

$$\begin{pmatrix} \hat{\Lambda}_y^{-1}\vec{I}_r \\ \hat{\Lambda}_b^{-1}\hat{\Lambda}_y^{-1}\vec{I}_r \end{pmatrix} = \hat{\kappa}(D_{xk}=0)\vec{x}_1,$$

the last term in the right-hand side of Eq. (B.2), multiplied by D_{xk}, can be interpreted as the difference of weights of the original system with $\vec{I} = \vec{I}_0$ and the same system with $\vec{I} = \vec{I}_r$. The first term in the right-hand side of Eq. (B.2), multiplied by D_{xk}, is equal to the sum of weights of horizontal paths with indices $k, k+1, \ldots, n$ in the original system minus the sum of weights of paths with indices $k+1, \ldots, n$ in the reduced system with $\vec{I} = \vec{I}_r$. Noticing that all outgoing vertical fluxes and horizontal fluxes leaving through sinks with indices $1, \ldots, k-1$ of the reduced system with $\vec{I} = \vec{I}_r$

are equal to the same fluxes of the original system with $\vec{I} = \vec{I}_0$ (because $\vec{f}_1$ is the same in both systems), Eq. (B.2) finally takes the form:

$$D_{xk}\frac{\partial w}{\partial D_{xk}} = \left[\vec{w}_y^{\mathrm{T}}\hat{\Lambda}_y\hat{\Lambda}_b^{-1} + \sum_{i=1}^{n}\frac{w_{x,i}D_{x,i}}{a_i}\hat{T}_{i-1}\right]_1 \cdot \hat{\kappa}^{-1}\hat{\kappa}(D_{xk}=0)\vec{x}_1 - \left(\vec{w}_y^{\mathrm{T}}\hat{\Lambda}_y\hat{\Lambda}_b^{-1} + \sum_{i=1,i\neq k}^{n}\frac{w_{x,i}D_{x,i}}{a_i}\hat{T}_{i-1}(D_{xk}=0)\right)_1 \vec{x}_1.$$

According to this relation, the derivative of the system weight with respect to D_{xk} is simply equal to the difference of weights of the original system with $\vec{I} = \vec{I}_r$ and the reduced system with $\vec{I} = \vec{I}_r$.

Appendix C. Physical background

In the presence of exact or approximate integrals of motion, particle trajectories are constrained to lie in a lower-dimensional manifold of the phase space, thus restricting particle diffusion in stochastic systems. A particle resonantly interacting with an electrostatic wave in a magnetic field is an example of the system with constrained diffusion. The equation of particle motion reads:

$$m\dot{\vec{v}} = -\operatorname{Re} iq\varphi_0\vec{k}e^{-i\omega t+ik_\parallel z+i\vec{k}_\perp\vec{r}_\perp} + \frac{q}{c}\vec{v}\times\vec{B}, \tag{C.1}$$

where m, q, $\vec{r}$ and $\vec{v}$ are the particle mass, charge, position and velocity correspondingly; $\vec{B} = \hat{\vec{z}}B_\parallel$ is the magnetic field assumed constant; $\varphi_0 k$, ω, and $\vec{k}$ are the wave amplitude, the frequency and the wave-vector correspondingly. Introducing new coordinate $\tilde{z} = z - \omega t/k_\parallel$, one can make a canonical transformation in the Hamiltonian corresponding to Eq. (C.1), to obtain [25]:

$$\frac{mv_\perp^2 + m(v_\parallel - \omega/k_\parallel)^2}{2} + \operatorname{Re} q\varphi_0 e^{-i\omega t+ik_\parallel z+i\vec{k}_\perp\vec{r}_\perp} = C,$$

where C is a constant of motion. When the wave amplitude is small and $q\varphi_0 \ll C$, this integral restricts the particle trajectory in the velocity space to a ring with the center at $\vec{v}_c = \vec{z}_0\omega/k_\parallel$, and with a width $\Delta u \sim q\varphi/mC$, where $\vec{z}_0$ is a unit vector directed along the z axis. If the resonance condition $\omega - k_\parallel u_\parallel = n\Omega = neB/mc$ is satisfied, a typical change of the particle velocity due to interaction with the wave greatly exceeds the ring width Δu and the particle trajectory in the velocity space is directed along the arcs forming the ring.

In physical systems where the wave-particle interaction is not a continuous process, but is broken into many short acts, in which particle phases are not correlated (an example being a mirror machine with localized rf regions), the particle dynamics is stochastic. In this case, the volume of the phase space subjected to the strongest diffusion contains resonant particles moving along the circle $v_\perp^2 + (v_\parallel - \omega/k_\parallel)^2 = \text{const}$. Due to resemblance of this volume to a thin neighborhood of one-dimensional curve, it is frequently referred to as a *diffusion path*. A single wave at finite amplitude can also induce this diffusion [26].

The α-channeling concept is based on arranging diffusion paths in the velocity space, in such a way that they connect areas of phase space where hot α particles are born to the much lower-energy areas where they are lost [16]. As a result of population inversion created along these paths, an average flux of α particles is induced, and the particles leave the system and cool at the same time, quickly converting their initial energy to the wave. In mirror machines, for instance, α-channeling can be implemented by arranging several rf regions along the device axis [20,21]. Varying parameters of the wave regions, the configuration of diffusion paths in the phase space can be optimized to extract maximum energy from α particles. In optimal configurations, it might be advantageous or even unavoidable for several diffusion paths to intersect, and, because the paths intersect with the loss boundary at different values of energy, the optimization problem of selecting wave amplitudes (and thus effective diffusion coefficients at the paths) minimizing the output energy of all leaving particles is posed. Similar optimization problems occur when α-channeling is applied to tokamaks [17–19].

References

[1] A.E. Scheidegger, The Physics of Flow Through Porous Media, third ed., University of Toronto Press, Toronto, 1974.
[2] B.J. Suchomel, B.M. Chen, M.B. Allen III, Transp. Porous Media 30 (1998) 1.
[3] K. Dunn, D. Bergman, J. Chem. Phys. 102 (1995) 3041.
[4] U. Hizi, D. Bergman, J. Appl. Phys. 87 (2000) 1704.
[5] E. Hellén, J. Ketoja, K. Niskanen, M. Alava, J. Pulp Paper Sci. 28 (2002) 55.
[6] C. Poupon, C.A. Clark, V. Frouin, J. Reǵis, I. Bloch, D. Le Bihan, J.-F. Mangin, NeuroImage 12 (2000) 184.
[7] S. Boccaletti, V. Latora, Y. Moreno, M. Chavez, D. Hwang, Phys. Rep. 424 (2006) 175.
[8] J. Kleinberg, in: Proceedings of the 9th ACM-SIAM Symposium on Discrete Algorithms, 1998, Association for Computing Machinery, New York, 1998;
D. Gibson, J. Kleinberg, P. Raghavan, in: Proceedings of the 9th ACM Conference on Hypertext and Hypermedia, 1998, ACM Press, New York, 1998.
[9] K. Eriksen, I. Simonsen, S. Maslov, K. Sneppen, Phys. Rev. Lett. 90 (2003) 148701.
[10] I. Simonsen, Physica A 357 (2005) 317.
[11] S. Wasserman, K. Faust, Social Network Analysis: Methods and Applications, Cambridge Univ. Press, Cambridge, 1994.
[12] Y. Zhang, M. Blattner, Y. Yu, Phys. Rev. Lett. 99 (2007) 154301.
[13] L.F. Costa, G. Travieso, Phys. Rev. E 75 (2007) 016102.
[14] D. Volchenkov, Ph. Blanchard, Phys. Rev. E 75 (2007) 026104.
[15] J. Cranck, The Mathematics of Diffusion, Oxford Univ. Press, New York, 1975.
[16] N.J. Fisch, J.M. Rax, Phys. Rev. Lett. 69 (1992) 612.
[17] M.C. Herrmann, N.J. Fisch, Phys. Rev. Lett. 79 (1997) 1495.
[18] N.J. Fisch, M.C. Herrmann, Plasma Phys. Controlled Fusion 41 (1999) A221.
[19] N.J. Fisch, M.C. Herrmann, Nucl. Fusion 35 (1995) 1753.
[20] N.J. Fisch, Phys. Rev. Lett. 97 (2006) 225001.
[21] A.I. Zhmoginov, N.J. Fisch, Phys. Plasmas 15 (2008) 042506.
[22] N.J. Fisch, J.M. Rax, Phys. Fluids B 5 (1993) 1754.
[23] R. Bellman, Dynamic Programming, Courier Dover Publications, Mineola, NY, 2003.
[24] D.G. Luenberger, Linear and Nonlinear Programming, second ed., Addison–Wesley, Amsterdam, 1984.
[25] G.R. Smith, A.N. Kaufman, Phys. Rev. Lett. 34 (1975) 1613.
[26] C.F.F. Karney, Phys. Fluids 22 (1979) 2188.