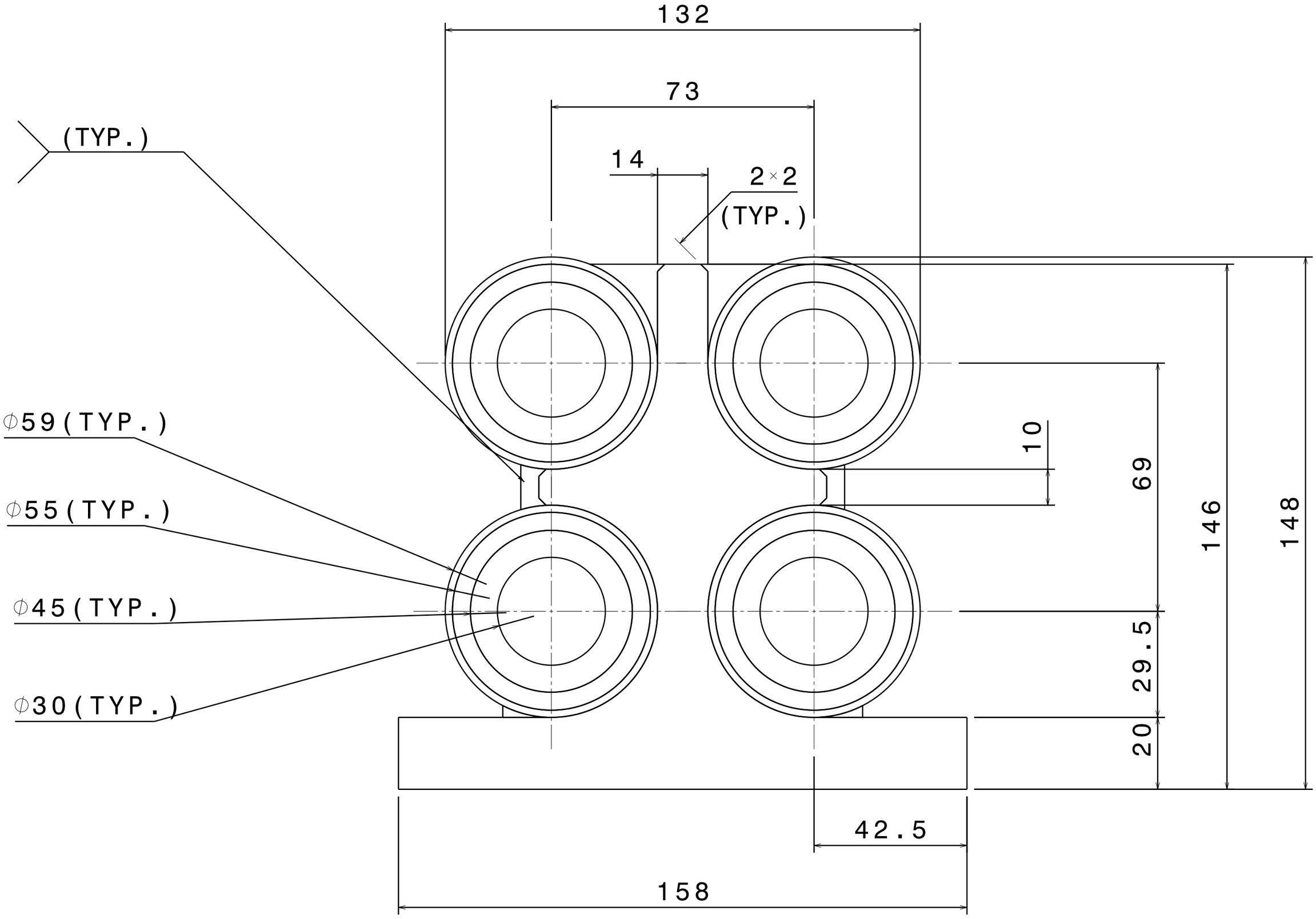

2X2 VS 59MM CONDUCTOR